HITACHI

SULLAIR®

USER MANUAL

Industrial Air Compressor
LS90, LS90S, LS90V,
LS110, LS110S, LS110V

125 & 150 hp (90 & 110 kW)

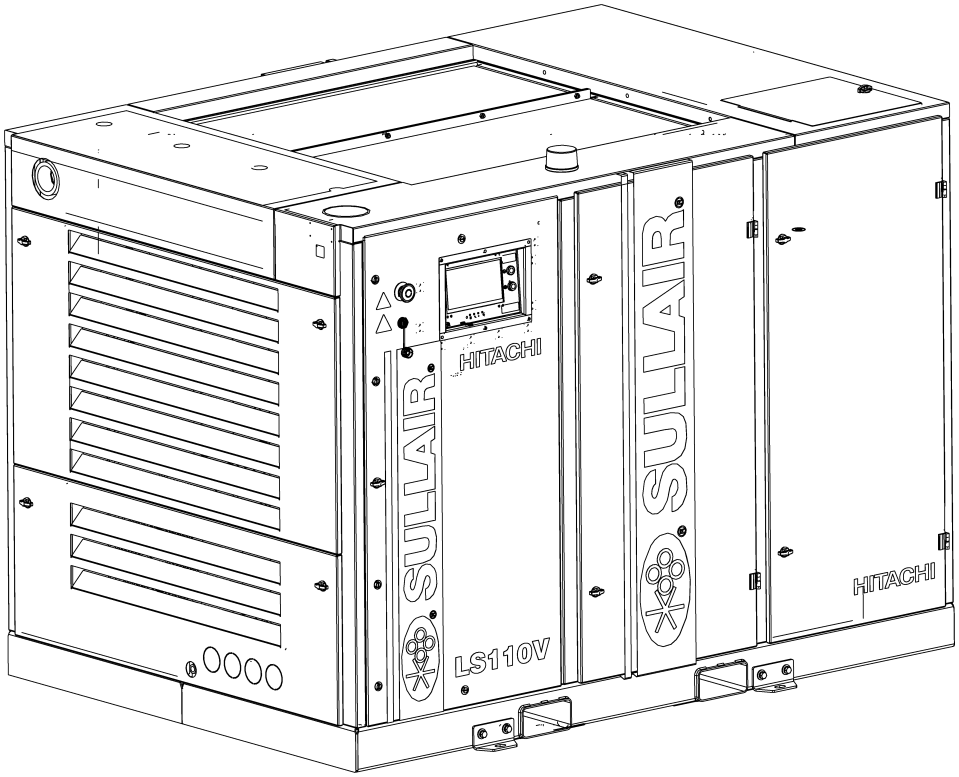

PART NUMBER:
02250231-030 R13

The information in this manual is current as of its publication date and applies to compressor models indicated on this cover with **serial number**:
US0123120001
and all subsequent serial numbers until next revision of this manual or release of a replacement manual..

Publication date: 05/30/2025
Copyright © 2025 Sullair, LLC. All rights reserved.

SAFETY WARNING

Users are required to read the entire User Manual before handling or using the product. Keep the User Manual in a safe place for future reference.

WARRANTY NOTICE

Failure to follow the instructions and procedures in this manual, or misuse of this equipment, will **void** its warranty.

Hitachi Global Air Power US, LLC

Subject to EAR, ECCN EAR99 and related export control restrictions.

Hitachi Global Air Power Training Courses

Hitachi Global Air Power training courses provide hands-on and classroom instruction for the proper operation, maintenance and troubleshooting of Sullair products. Service training courses for stationary compressors are offered at regular intervals throughout the year at Hitachi Global Air Power training facilities located in Michigan City, Indiana and Charlotte, North Carolina. Service training courses for portable compressors can be scheduled on-site at authorized dealer locations.

For more information contact:

Hitachi Global Air Power Training Department

1-888-SULLAIR or
219-879-5451 (ext. 5623)
Training@Sullair.com
www.SullairTraining.com

- Or Write -

Hitachi Global Air Power
1 Sullair Way
Michigan City, IN 46360
Attn: Training Department

Subject to EAR, ECCN EAR99 and related export control restrictions.

Table of Contents

Section 1: Safety 7
1.1 General 7
1.2 Personal protective equipment 7
1.3 Pressure release 7
1.4 Fire and explosion 8
1.5 Moving parts 8
1.6 Hot surfaces, sharp edges and sharp corners 9
1.7 Toxic and irritating substances 9
1.8 Electrical shock 9
1.9 Lifting 10
1.10 Entrapment 10
1.11 Implementation of lockout/tagout 10
1.12 Safety warnings 11
1.13 Safety decals 13

Section 2: Description 15
2.1 Introduction 15
2.2 Description of components 15
2.3 Sullair air end, functional description 15
2.4 Compressor cooling and lubrication system, functional description 17
2.5 Compressor discharge system, functional description 18
2.6 Control system, functional description 18
2.7 Air inlet system, functional description 20
2.8 Variable speed drive (VSD) components 21
2.9 VSD control system, functional description 21

Section 3: Specifications 23
3.1 Tables of specifications—LS90 & LS110 23
3.2 Lubrication guide 24
3.3 Application guide 25
3.4 Lubrication change recommendations and maintenance, fluid 25
3.5 ID, air-cooled, enclosed 26
3.6 ID, air-cooled, enclosed with optional weather hood 28
3.7 ID, air-cooled, open 30
3.8 ID, water-cooled, enclosed 32
3.9 ID, water-cooled, enclosed with optional weather hood 34
3.10 ID, water-cooled, open 36
3.11 Piping & instrumentation, air-cooled wye-delta 38

3.12 Piping & instrumentation, air-cooled, VSD spiral valve 40
3.13 Piping & instrumentation, water-cooled wye-delta 42
3.14 Piping & instrumentation, water-cooled, VSD spiral valve 44
3.15 Wiring diagram, wye-delta spiral valve 46
3.16 Wiring diagram, VSD 50

Section 4: Installation 53
4.1 Mounting of compressor 53
4.2 Ventilation & cooling 53
4.2.1 Air-cooled compressors 53
4.2.2 Water-cooled compressors 53
4.2.3 Water system venting 54
4.2.4 Draining the water system 54
4.2.5 Water quality recommendations 54
4.2.5.1 Scale 55
4.2.5.2 Corrosion 55
4.2.5.3 Biological and organic fouling (slime) 55
4.2.6 Seawater-cooled units 55
4.3 Outdoor installation (sheltered) 56
4.4 Service air piping 56
4.4.1 Pipe sizing 57
4.4.2 Use of auxiliary receiver tank 57
4.5 Coupling alignment check 58
4.6 Fluid level check 58
4.7 Electrical preparation 58
4.8 Motor rotation direction check 58

Section 5: Operation 61
5.1 Introduction 61
5.2 Purpose of controls 61
5.3 Initial start-up procedure 62
5.4 Subsequent start-up procedure 62
5.5 Shutdown procedure 62

Section 6: Controller 63
6.1 Controller layout 63
6.2 Home page 65
6.3 Main Menu page 66
6.4 **User Preferences** page 67
6.5 Menu hierarchy 68
6.6 AirLinx 2.0 remote monitoring 69
6.6.1 Troubleshooting AirLinx 2.0 communications 69

Section 7: Maintenance 71
7.1 General 71

7.2 Daily operation 71
7.3 Maintenance after initial 50 hours of operation 71
7.4 Maintenance every 2000 hours 71
7.5 Motor maintenance 72
7.6 Fluid maintenance 72
7.7 Filter maintenance 72
7.7.1 Fluid filter element replacement 72
7.8 Air filter maintenance 73
7.8.1 Air filter element replacement 73
7.9 Separator maintenance 73
7.9.1 Separator element replacement 73
7.10 Oil return / sight glass maintenance 75
7.11 Pressure regulator adjustment 75
7.12 Water condensate drain maintenance 76
7.13 Control line strainer 76
7.14 Shaft coupling maintenance 76
7.15 Shell and Tube Water Cooler Maintenance and Cleaning 76
7.15.1 Cleaning Interval 76
7.16 Troubleshooting 77
7.16.1 Introduction 77
7.16.2 Troubleshooting guide 77

Notes:

Section 1
Safety

NOTE

Operator is required to read entire instruction manual.

1.1 General

Sullair and its subsidiaries design and manufacture all of their products so they can be operated safely. However, the responsibility for safe operation rests with those who use and maintain these products. The following safety precautions are offered as a guide which, if conscientiously followed, will minimize the possibility of accidents throughout the useful life of this equipment.

The compressor should be operated only by those who have been trained and delegated to do so, and who have read and understood this Operator's Manual. Failure to follow the instructions, procedures and safety precautions in this manual may result in accidents and injuries. **NEVER** start the compressor unless it is safe to do so. **DO NOT** attempt to operate the compressor with a known unsafe condition. Tag the compressor and render it inoperative by disconnecting and locking out all power at source or otherwise disabling its prime mover so others who may not know of the unsafe condition cannot attempt to operate it until the condition is corrected.

Install, use and operate the compressor only in full compliance with all pertinent OSHA regulations and/or any applicable Federal, State, and Local codes, standards and regulations. **DO NOT** modify the compressor and/or controls in any way except with written factory approval.

While not specifically applicable to all types of compressors with all types of prime movers, most of the precautionary statements contained herein are applicable to most compressors and the concepts behind these statements are generally applicable to all compressors.

1.2 Personal protective equipment

A. Prior to installing or operating the compressor, owners, employers and users should become familiar with, and comply with, all applicable OSHA regulations and/or any applicable Federal, State and Local codes, standards, and regulations relative to personal protective equipment, such as eye and face protective equipment, respiratory protective equipment, equipment intended to protect the extremities, protective clothing, protective shields and barriers and electrical protective equipment, as well as noise exposure administrative and/or engineering controls and/or personal hearing protective equipment.

1.3 Pressure release

A. Install an appropriate flow-limiting valve between the service air outlet and the shut-off (throttle) valve, either at the compressor or at any other point along the air line, when an air hose exceeding ½″ (13 mm) inside diameter is to be connected to the shut-off (throttle) valve, to reduce pressure in case of hose failure, per OSHA Standard 29 CFR 1926.302(b)(7) and/or any applicable Federal, State and Local codes, standards and regulations.

B. When the hose is to be used to supply a manifold, install an additional appropriate flow-limiting valve between the manifold and each air hose exceeding ½″ (13 mm) inside diameter that is to be connected to the manifold to reduce pressure in case of hose failure.

C. Provide an appropriate flow-limiting valve at the beginning of each additional 75 feet (23 m) of hose in runs of air hose exceeding ½″ (13 mm) inside diameter to reduce pressure in case of hose failure.

D. Flow-limiting valves are listed by pipe size and flow-rated. Select appropriate valves accordingly, in

accordance with their manufacturer's recommendations.

E. **DO NOT** use air tools that are rated below the maximum pressure rating of the compressor. Select air tools, air hoses, pipes, valves, filters and other fittings accordingly. **DO NOT** exceed manufacturer's rated safe operating pressures for these items.

F. Secure all hose connections by wire, chain or other suitable retaining device to prevent tools or hose ends from being accidentally disconnected and expelled.

G. Open fluid filler cap only when compressor is not running and is not pressurized. Shut down the compressor and bleed the receiver tank to zero internal pressure before removing the cap.

H. Vent all internal pressure prior to opening any line, fitting, hose, valve, drain plug, connection or other component, such as filters and line oilers, and before attempting to refill optional air line anti-icer systems with antifreeze compound.

I. Keep personnel out of line with and away from the discharge opening of hoses or tools or other points of compressed air discharge.

J. **DO NOT** use air at pressures higher than 2.1 bar for cleaning purposes, and then only with effective chip guarding and personal protective equipment per OSHA Standard 29 CFR 1910.242(b) and/or any applicable Federal, State, and Local codes, standards and regulations.

K. **DO NOT** engage in horseplay with air hoses as death or serious injury may result.

1.4 Fire and explosion

A. Clean up spills of lubricant or other combustible substances immediately, if such spills occur.

B. Shut off the compressor and allow it to cool. Then keep sparks, flames and other sources of ignition away and **DO NOT** permit smoking in the vicinity when checking or adding lubricant or when refilling air line anti-icer systems with antifreeze compound.

C. **DO NOT** permit fluids, including air line anti-icer system antifreeze compound or fluid film, to accumulate on, under or around acoustical material, or on any external surfaces of the air compressor. Wipe down using an aqueous industrial cleaner or steam clean as required. If necessary, remove acoustical material, clean all surfaces and then replace acoustical material. Any acoustical material with a protective covering that has been torn or punctured should be replaced immediately to prevent accumulation of liquids or fluid film within the material. **DO NOT** use flammable solvents for cleaning purposes.

D. Disconnect and lock out all power at source prior to attempting any repairs or cleaning of the compressor or of the inside of the enclosure, if any.

E. Keep electrical wiring, including all terminals and pressure connectors in good condition. Replace any wiring that has cracked, cut, abraded or otherwise degraded insulation, or terminals that are worn, discolored or corroded. Keep all terminals and pressure connectors clean and tight.

F. Keep grounded and/or conductive objects such as tools away from exposed live electrical parts such as terminals to avoid arcing which might serve as a source of ignition.

G. Remove any acoustical material or other material that may be damaged by heat or that may support combustion and is in close proximity, prior to attempting weld repairs.

H. Keep suitable fully charged Class BC or ABC fire extinguisher or extinguishers nearby when servicing and operating the compressor.

I. Keep oily rags, trash, leaves, litter or other combustibles out of and away from the compressor.

J. **DO NOT** operate the compressor without proper flow of cooling air or water or with inadequate flow of lubricant or with degraded lubricant.

K. **DO NOT** attempt to operate the compressor in any classification of hazardous environment unless the compressor has been specially designed and manufactured for that duty.

1.5 Moving parts

A. Keep hands, arms and other parts of the body and clothing away from couplings, belts, pulleys, fans and other moving parts.

B. **DO NOT** attempt to operate the compressor with the fan, coupling or other guards removed.

C. Wear snug-fitting clothing and confine long hair when working around this compressor, especially when exposed to hot or moving parts.

D. Keep access doors, if any, closed except when making repairs or adjustments.

E. Make sure all personnel are out of and/or clear of the compressor prior to attempting to start or operate it.

F. Disconnect and lock out all power at source and verify at the compressor that all circuits are de-energized to minimize the possibility of accidental start-up, or operation, prior to attempting repairs or adjustments. This is especially important when compressors are remotely controlled.

G. Keep hands, feet, floors, controls and walking surfaces clean and free of fluid, water or other liquids to minimize the possibility of slips and falls.

1.6 Hot surfaces, sharp edges and sharp corners

A. Avoid bodily contact with hot fluid, hot coolant, hot surfaces and sharp edges and corners.

B. Keep all parts of the body away from all points of air discharge.

C. Wear personal protective equipment including gloves and head covering when working in, on or around the compressor.

D. Keep a first aid kit handy. Seek medical assistance promptly in case of injury. DO NOT ignore small cuts and burns as they may lead to infection

1.7 Toxic and irritating substances

A. **DO NOT** use air from this compressor for respiration (breathing) except in full compliance with OSHA Standards 29 CFR 1910 and/or any applicable Federal, State or Local codes or regulations.

DANGER

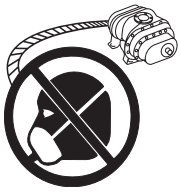

Death or serious injury can result from inhaling compressed air without using proper safety equipment. See OSHA standards and/or any applicable Federal, State, and Local codes, standards and regulations on safety equipment.

B. **DO NOT** use air line anti-icer systems in air lines supplying respirators or other breathing air utilization equipment and **DO NOT** discharge air from these systems into unventilated or other confined areas.

C. Operate the compressor only in open or adequately ventilated areas.

D. Locate the compressor or provide a remote inlet so that it is not likely to ingest exhaust fumes or other toxic, noxious or corrosive fumes or substances.

E. Coolants and lubricants used in this compressor are typical of the industry. Care should be taken to avoid accidental ingestion and/or skin contact. In the event of ingestion, seek medical treatment promptly. Wash with soap and water in the event of skin contact. Consult Material Safety Data Sheet for information pertaining to fluid of fill.

F. Wear goggles or a full face shield when adding anti-freeze compound to air line anti-icer systems.

G. If air line anti-icer system antifreeze compound enters the eyes or if fumes irritate the eyes, they should be washed with large quantities of clean water for fifteen minutes. A physician, preferably an eye specialist, should be contacted immediately.

H. **DO NOT** store air line anti-icer system antifreeze compound in confined areas.

I. The antifreeze compound used in air line antifreeze systems contains methanol and is toxic, harmful or fatal if swallowed. Avoid contact with the skin or eyes and avoid breathing the fumes. If swallowed, induce vomiting by administering a tablespoon of salt, in each glass of clean, warm water until vomit is clear, then administer two teaspoons of baking soda in a glass of clean water. Have patient lay down and cover eyes to exclude light. Call a physician immediately.

1.8 Electrical shock

A. This compressor should be installed and maintained in full compliance with all applicable Federal, State and Local codes, standards and regulations, including those of the National Electrical Code, and also including those relative to equipment grounding conductors, and only by personnel that are trained, qualified and delegated to do so.

B. Keep all parts of the body and any hand-held tools or other conductive objects away from exposed live parts of electrical system. Maintain dry footing, stand on insulating surfaces and **DO NOT** contact any other portion of the compressor when making adjustments or repairs to exposed live parts of the electrical system. Make all such adjustments or repairs with

one hand only, so as to minimize the possibility of creating a current path through the heart.

C. Attempt repairs in clean, dry and well lighted and ventilated areas only.

D. **DO NOT** leave the compressor unattended with open electrical enclosures. If necessary to do so, then disconnect, lock out and tag all power at source so others will not inadvertently restore power.

E. Disconnect, lock out, and tag all power at source prior to attempting repairs or adjustments to rotating machinery and prior to handling any ungrounded conductors.

DANGER

All field equipment must be tested for electrostatic fields prior to servicing or making contact with the machine using the following or equivalent test equipment:

- 90 – 600 VAC: Volt detector such as Fluke Model 1AC-A
- 600 – 7000 VAC: Voltage detector such as Fluke Networks Model C9970

It is the responsibility of each organization to provide/arrange training for all their associates expected to test for electrostatic fields.

1.9 Lifting

A. If the compressor is provided with a lifting bail, then lift by the bail provided. If no bail is provided, then lift by sling. Compressors to be air-lifted by helicopter must not be supported by the lifting bail but by slings instead. In any event, lift and/or handle only in full compliance with OSHA standards 29 CFR 1910 subpart N and/or any applicable Federal, State, and Local codes, standards and regulations.

B. Inspect points of attachment for cracked welds and for cracked, bent, corroded or otherwise degraded members and for loose bolts or nuts prior to lifting.

C. Make sure entire lifting, rigging and supporting structure has been inspected, is in good condition and has a rated capacity of at least the weight of the compressor. If you are unsure of the weight, then weigh compressor before lifting.

D. Make sure lifting hook has a functional safety latch or equivalent, and is fully engaged and latched on the bail or slings.

E. Use guide ropes or equivalent to prevent twisting or swinging of the compressor once it has been lifted clear of the ground.

F. **DO NOT** attempt to lift in high winds.

G. Keep all personnel out from under and away from the compressor whenever it is suspended.

H. Lift compressor no higher than necessary.

I. Keep lift operator in constant attendance whenever compressor is suspended.

J. Set compressor down only on a level surface capable of safely supporting at least its weight and its loading unit.

K. When moving the compressor by forklift truck, utilize fork pockets if provided. Otherwise, utilize pallet if provided. If neither fork pockets or pallet are provided, then make sure compressor is secure and well balanced on forks before attempting to raise or transport it any significant distance.

L. Make sure forklift truck forks are fully engaged and tipped back prior to lifting or transporting the compressor.

M. Forklift no higher than necessary to clear obstacles at floor level and transport and corner at minimum practical speeds.

N. Make sure pallet-mounted compressors are firmly bolted or otherwise secured to the pallet prior to attempting to forklift or transport them. **NEVER** attempt to forklift a compressor that is not secured to its pallet, as uneven floors or sudden stops may cause the compressor to tumble off, possibly causing serious injury or property damage in the process.

1.10 Entrapment

A. If the compressor enclosure, if any, is large enough to hold a man and if it is necessary to enter it to perform service adjustments, inform other personnel before doing so, or else secure and tag the access door in the open position to avoid the possibility of others closing and possibly latching the door with personnel inside.

B. Make sure all personnel are out of compressor before closing and latching enclosure doors.

1.11 Implementation of lockout/tagout

The energy control procedure defines actions necessary to lockout a power source of any machine to be repaired,

serviced or set-up, where unexpected motion, or an electrical or other energy source, would cause personal injury or equipment damage. The power source on any machine shall be locked out by each employee doing the work except when motion is necessary during setup, adjustment or trouble-shooting.

A. The established procedures for the application of energy control shall cover the following elements and actions and shall be initiated only by Authorized Persons and done in the following sequence:

1. Review the equipment or machine to be locked and tagged out.
2. Alert operator and supervisor of which machine is to be worked on, and that power and utilities will be turned off.
3. Check to make certain no one is operating the machine before turning off the power.
4. Turn off the equipment using normal shutdown procedure.
5. Disconnect the energy sources:
   a. Air and hydraulic lines should be bled, drained and cleaned out. There should be no pressure in these lines or in the reservoir tanks. Lockout or tag lines or valves.
   b. Any mechanism under tension or pressure, such as springs, should be released and locked out or tagged.
   c. Block any load or machine part prior to working under it.
   d. Electrical circuits should be checked with calibrated electrical testing equipment and stored energy and electrical capacitors should be safely discharged.
6. Lockout and/or Tagout each energy source using the proper energy isolating devices and tags. Place lockout hasp and padlock or tag at the point of power disconnect where lockout is required by each person performing work. Each person shall be provided with their own padlock and have possession of the only key. If more than one person is working on a machine *each* person *shall* affix personal lock and tag using a multi-lock device.
7. Tagout devices shall be used only when power sources are not capable of being locked out by use of padlocks and lockout hasp devices. The name of the person affixing tag to power source must be on tag along with date tag was placed on power source.
8. Release stored energy and bring the equipment to a “zero mechanical state”.
9. Verify Isolation: Before work is started, test equipment to ensure power is disconnected.

B. General Security

1. The lock shall be removed by the “Authorized” person who put the lock on the energy-isolating device. No one other than the person/persons placing padlocks and lockout hasps on power shall remove padlock and lockout hasps and restore power. However, when the authorized person who applied the lock is unavailable to remove it his/her Supervisor may remove padlock/padlocks and lockout hasps and restore power only if it is first:
   a. verified that no person will be exposed to danger.
   b. verified that the “Authorized” person who applied the device is not in the facility.
   c. noted that all reasonable efforts to contact the “Authorized” person have been made to inform him or her that the lockout or tagout device has been removed.
   d. ensured that the “Authorized” person is notified of lock removal before returning to work.
2. Tagout System—Tags are warning devices affixed at points of power disconnect and are not to be removed by anyone other that the person placing tag on power lockout. Tags shall never be by-passed, ignored, or otherwise defeated.

1.12 Safety warnings

The following special instructions apply to VSD packages provided with electronic adjustable speed motor drives. These cautions that apply to VSD operation.

WARNING

Ground the unit following the instructions in this manual. Ungrounded units may cause electric shock and/or fire. The variable speed drive has a large capacitive leakage current during operation, which can cause enclosure parts to be above ground potential. Proper grounding, as described in this manual, is required. Failure to observe this precaution could result in death or severe injury.

WARNING

Before applying power to the variable speed drive, make sure that the front and cable covers are closed and fastened to prevent exposure to potential electrical fault conditions. Failure to observe this precaution could result in death or severe injury.

WARNING

Refer all drive service to trained technicians. This equipment should be installed, adjusted, and serviced by qualified electrical maintenance personnel familiar with the construction and operation of this type of equipment and the hazards involved and in accordance with published service manuals. Failure to observe this precaution could result in death or severe injury.

WARNING

Line terminals (L1, L2, L3), motor terminals (U, V, W) and the DC link/brake resistor terminals (-/+) are live when the drive is connected to power, even if the motor is not running. Contact with this voltage is extremely dangerous and may cause death or severe injury.

WARNING

Before opening the variable speed drive covers:

- Disconnect all power to the variable speed drive.
- Wait a minimum of 5 (five) minutes after all the lights on the keypad are off. This allows time for the DC bus capacitors to discharge.
- A hazard voltage may still remain in the DC bus capacitors even if the power has been turned off. Confirm that the capacitors have fully discharged by measuring their voltage using a multimeter set to measure DC voltage. Failure to follow the above precautions may cause death or severe injury.

CAUTION

Do not perform any megger or voltage withstand tests on any part of the variable speed drive or its components. Improper testing may result in damage. Prior to any tests or measurements of the motor or the motor cable, disconnect the motor cable at the variable speed drive output terminals (U, V, W) to avoid damaging the variable speed drive during motor or cable testing.

CAUTION

Do not touch any components on the circuit boards. Static voltage discharge may damage the components.

CAUTION

Install the variable speed drive in a well ventilated room that is not subject to temperature extremes, high humidity, or condensation, and avoid locations that are directly exposed to sunlight, or have high concentrations of dust, corrosive gas, explosive gas, inflammable gas, grinding fluid mist, etc. Improper installation may result in a fire hazard.

CAUTION

Make sure that no power correction capacitors are connected to the variable speed drive output or the motor terminals to prevent variable speed drive malfunction and potential damage.

CAUTION

Make sure that the variable speed drive output terminals (U, V, W) are not connected to the utility line power as severe damage to the VSD may occur.

NOTE

Interior electrical wiring is performed at the factory. Required customer wiring is minimal, but should be done by a qualified electrician in compliance with OSHA, National Electrical Code, and/or any other applicable State, Federal, and local electrical codes concerning isolation switches, fused disconnects, etc. Sullair provides a wiring diagram for use by the installer.

NOTE

Customer must provide electrical supply power disconnect within sight of machine.

1.13 Safety decals

WARNING

Auto start hazard

This machine is equipped with an auto start sequence that will start the unit when power is restored after a power failure or as part of automatic operation, which can result in serious injury or death.

Do not attempt to make any adjustments or perform any maintenance on this machine without disconnecting both main line and control circuit electrical power and follow all of your company's prescribed safety practices for electrical equipment.

Notes:

Section 2
Description

2.1 Introduction

Your new Sullair flood-lubricated rotary screw air compressor will provide you with a unique experience in improved reliability and simplified maintenance. Compared to other types of compressors, the Sullair rotary screw is unique in mechanical reliability, with “No Wear” and “No Inspection” required of the working parts within the compressor air end. Read *Section 7: Maintenance* on page 70 to see how surprisingly easy it is to keep your air compressor in top operating condition.

2.2 Description of components

Refer to *Figure 2-1*. The components and assemblies of the air compressor are clearly shown. The complete package includes compressor, electric motor, starter, compressor inlet system, compressor discharge system, compressor lubrication and cooling system, capacity control system, controller, aftercooler, a water separator and drain, all mounted on a heavy gauge steel frame.

On air-cooled models, a fan draws air into the enclosure over the fan and main motors through the combined aftercooler and fluid cooler thereby removing the compression heat from the compressed air and the cooling fluid, and forces it out the top of the machine.

On water-cooled models, a shell and tube heat exchanger is mounted on the compressor frame. Fluid is piped into the heat exchanger where compression heat is removed from the fluid. Another similar heat exchanger cools the compressed air.

Both air-cooled and water-cooled versions have easily accessible items such as the fluid filter, air/oil separator and control valves. The inlet air filter is also easily accessible for servicing.

2.3 Sullair air end, functional description

Sullair air compressors feature the Sullair compressor air end, a single-stage, positive displacement, flood lubricated-type compressor. This air end provides continuous compression to meet your needs.

NOTE

With a Sullair compressor, there is no maintenance or inspection of the internal parts of the compressor air end permitted in accordance with the terms of the warranty.

Sullair compressors are factory-filled with Sullube® lubricant. For more information on fluid fill, consult *Section 3.4: Lubrication change recommendations and maintenance, fluid* on page 24.

WARRANTY NOTICE

Mixing of other lubricants within the compressor unit will void all warranties.

Fluid is injected into the compressor air end hoses and mixes directly with the air as the rotors turn, compressing the air. The fluid flow has three basic functions:

- As coolant, it controls the rise of air temperature normally associated with the heat of compression.
- Seals the clearance paths between the rotors and the stator and also between the rotors themselves.
- Acts as a lubricating film between the rotors allowing one rotor to directly drive the other, which is an idler.

After the air/fluid mixture is discharged from the compressor air end, the fluid is separated from the air. At this time, the air flows through an aftercooler and separator then to your service line while the fluid is being cooled in preparation for reinjection.

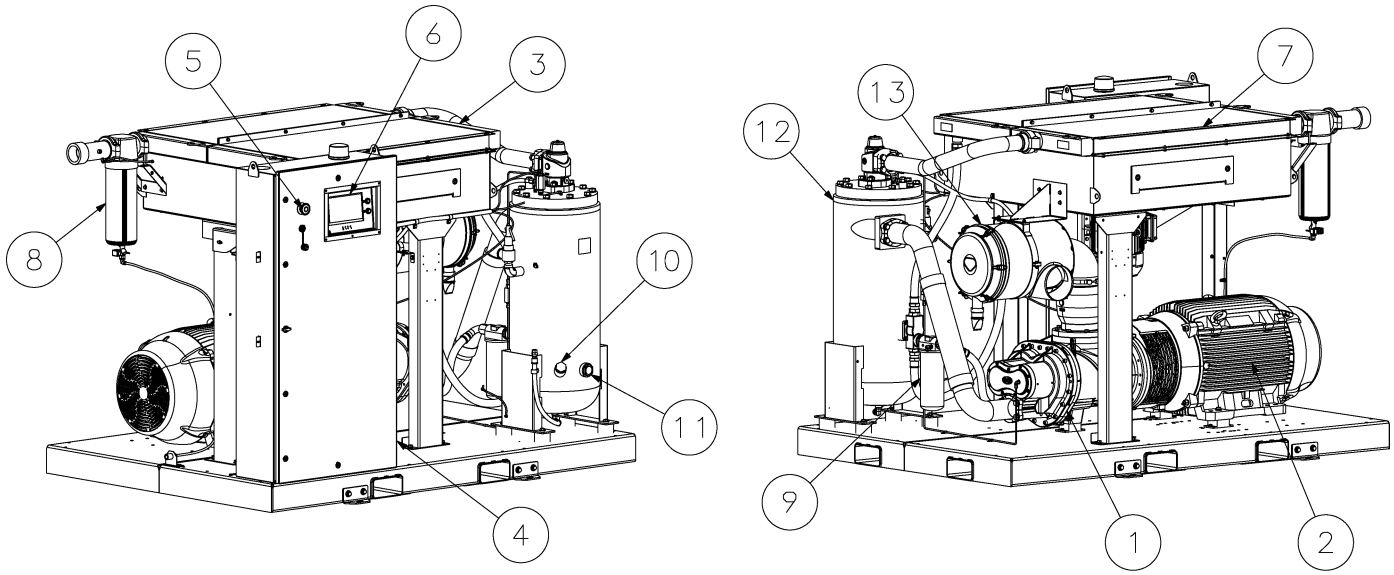

Air-cooled models

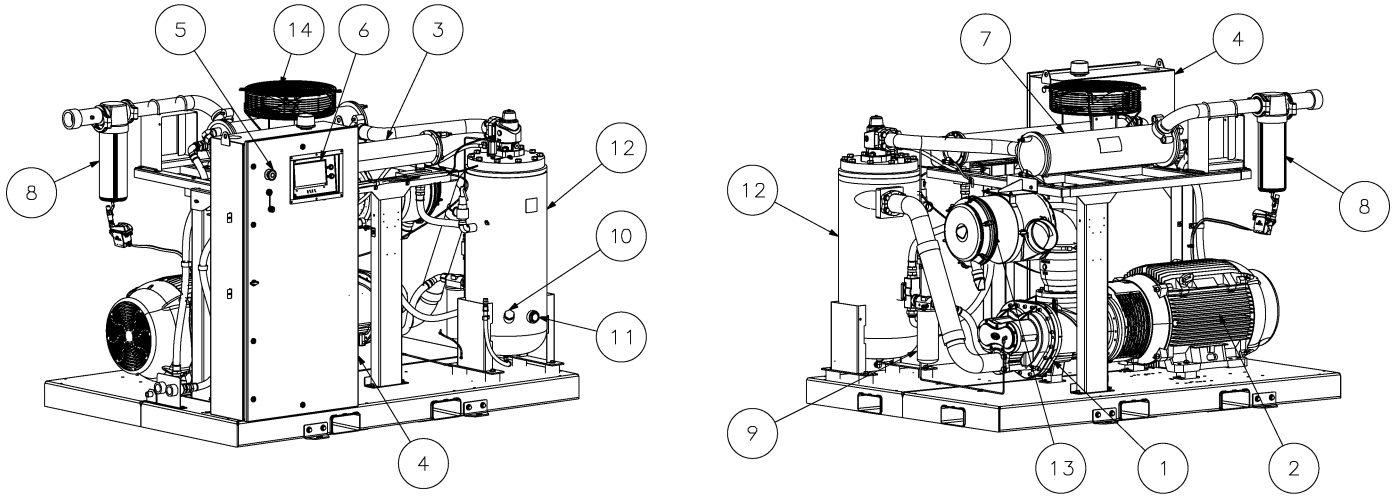

Water-cooled models

1.	Compressor air end	8.	Moisture separator
2.	Motor	9.	Fluid filter
3.	Oil cooler	10.	Fluid fill
4.	Electrical enclosure	11.	Sight glass
5.	E-Stop button	12.	Separator tank
6.	Controller	13.	Air inlet filter
7.	Aftercooler	14.	Canopy vent fan

Figure 2-1: LS90 and LS110 overall component layout

2.4 Compressor cooling and lubrication system, functional description

Refer to *Figure 2-2*. The cooling and lubrication system (air-cooled version) consists of a fan, fan motor, radiator-type aftercooler/fluid cooler, full flow fluid filter, thermal valve, and interconnecting hoses. For water-cooled models, two shell and tube heat exchangers are substituted for the radiator-type cooler listed above. The pressure in the separator/sump tank causes fluid flow by forcing the fluid from the high pressure area of the separator/sump tank to an area of lower pressure in the compressor unit.

Fluid flows from the bottom of the separator/sump tank to the thermal valve. The thermal valve is fully open when the fluid temperature is below 185°F (85°C) [210°F (99°C) for pressures rated above 150 psig]. The fluid passes through the thermal valve, the main filter and directly to the compressor unit where it lubricates, cools and seals the rotors and the compression chamber.

As the discharge temperature rises above 185°F (85 °C), due to the heat of compression, the thermal valve begins to adjust and a portion of the fluid then flows through the cooler. From the cooler the fluid flows to the fluid filter and then on to the compressor unit.

A portion of the fluid flowing to the compressor is routed to the anti-friction bearings which support the rotors inside the compressor unit.

The fluid filter has a replacement element and an integral pressure bypass valve. Refer to *Section 3.4: Lubrication change recommendations and maintenance, fluid* on page 24.

Water-cooled models have a water pressure switch to prevent operation with inadequate water pressure.

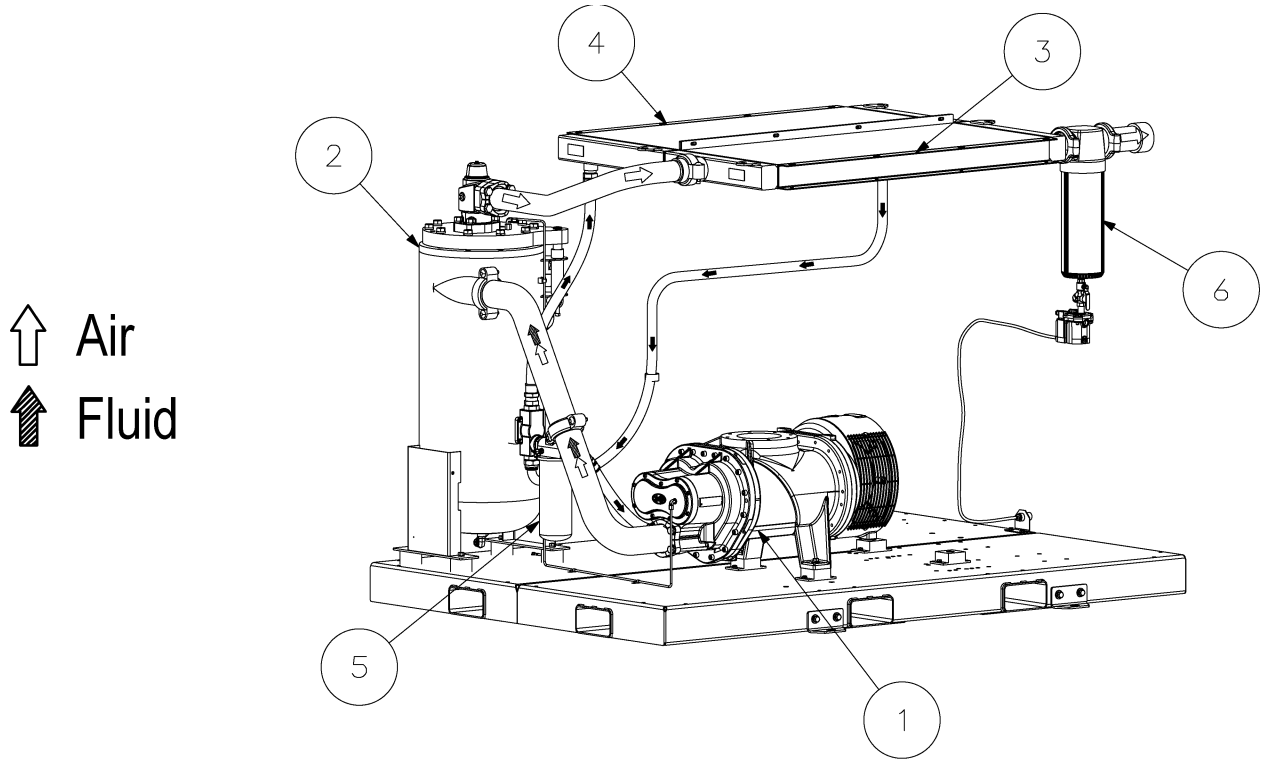

1.	Compressor air end	4.	Oil cooler
2.	Separator tank	5.	Fluid filter
3.	Aftercooler	6.	Moisture separator

Figure 2-2: LS90 and LS110 cooling / lubrication and discharge system

2.5 Compressor discharge system, functional description

Refer to *Figure 2-2*. The compressor unit discharges the compressed air/fluid mixture into the combination separator/sump tank.

The separator/sump has three basic functions:

- It acts as a primary fluid separator.
- Serves as the compressor fluid sump.
- Houses the final fluid separator.

The compressed air/fluid mixture enters the separator/sump tank and flows through an internal baffle system. The direction of movement is changed and its velocity significantly reduced, thus causing large droplets of fluid to form and fall to the bottom of the separator/sump tank. The fractional percentage of fluid remaining in the compressed air collects on the surface of the separator element as the compressed air flows through the separator. A return line (or scavenge tube) leads from the dry side of the separator/sump tank to a medium pressure region of the compressor unit. Fluid collecting on the bottom of the separator is returned to the compressor by a pressure differential between the separator/sump and the compressor. A visual sight glass is located on the return line to observe this fluid flow. There is also an orifice in this return line (protected by a strainer) to assure proper flow. A message on the controller indicates if abnormal pressure drop through the separator develops. Refer to *Section 3.4: Lubrication change recommendations and maintenance, fluid* on page 24.

A minimum pressure/check valve, located downstream from the separator, assures a minimum separator/sump pressure of 50 psig (3.4 bar) during loaded conditions. This pressure is necessary for proper air/fluid separation and proper fluid circulation.

A terminal check valve is incorporated into the minimum pressure/check valve to prevent compressed air in the service line from bleeding back into the separator/sump on shutdown and during operation of the compressor in an unloaded condition.

A pressure relief valve (located on the wet side of the separator) is set to open if the separator/sump tank pressure exceeds the separator/sump tank rating. The controller will shut down the compressor if the discharge temperature reaches 235°F (113°C).

WARNING

Do not remove caps, plugs, and/or other components when compressor is running or pressurized. Stop compressor and relieve all internal pressure before doing so.

Fluid is added to the separator/sump tank via a capped fluid filler opening, placed low on the tank to prevent overfilling of the separator/sump tank. A sight glass enables the operator to visually monitor the separator/sump tank fluid level.

2.6 Control system, functional description

Refer to *Figure 2-3*. The purpose of the compressor control system is to regulate the amount of air being compressed to match the amount of compressed air being used. The capacity control system consists of a solenoid valve, regulator valve and an inlet valve. The functional description of the control system is described below in four distinct phases of operation. For explanatory purposes, this description will apply to a compressor with an operating range of 110 to 120 psig (7.6 to 8.3 bar). A compressor with any other pressure range would operate in the same manner except stated pressures.

Start mode—0 to 50 psig (0 to 3.4 bar)

When the controller Start button is depressed, the separator/sump tank pressure will quickly rise from 0 to 50 psig (0 to 3.4 bar). The compressor initially starts unloaded with the solenoid valve open and the inlet valve closed. It then switches to full load when full rpm has been achieved. During this period, the solenoid valve is closed, the inlet valve is fully open and the compressor pumps at full rated capacity. The rising compressor air pressure is isolated from the service line in this phase by the minimum pressure valve set at approximately 50 psig (3.4 bar).

Full load mode—50 to 110 psig (3.4 to 7.6 bar)

When the compressed air pressure rises above 50 psig (3.4 bar), the minimum pressure valve opens allowing compressed air to flow into the service line. From this point on, the line air pressure is continually monitored by the controller. The solenoid valve remains closed during this phase. The inlet valve is in the fully open position as long as the compressor is running at 110 psig (7.6 bar) or below.

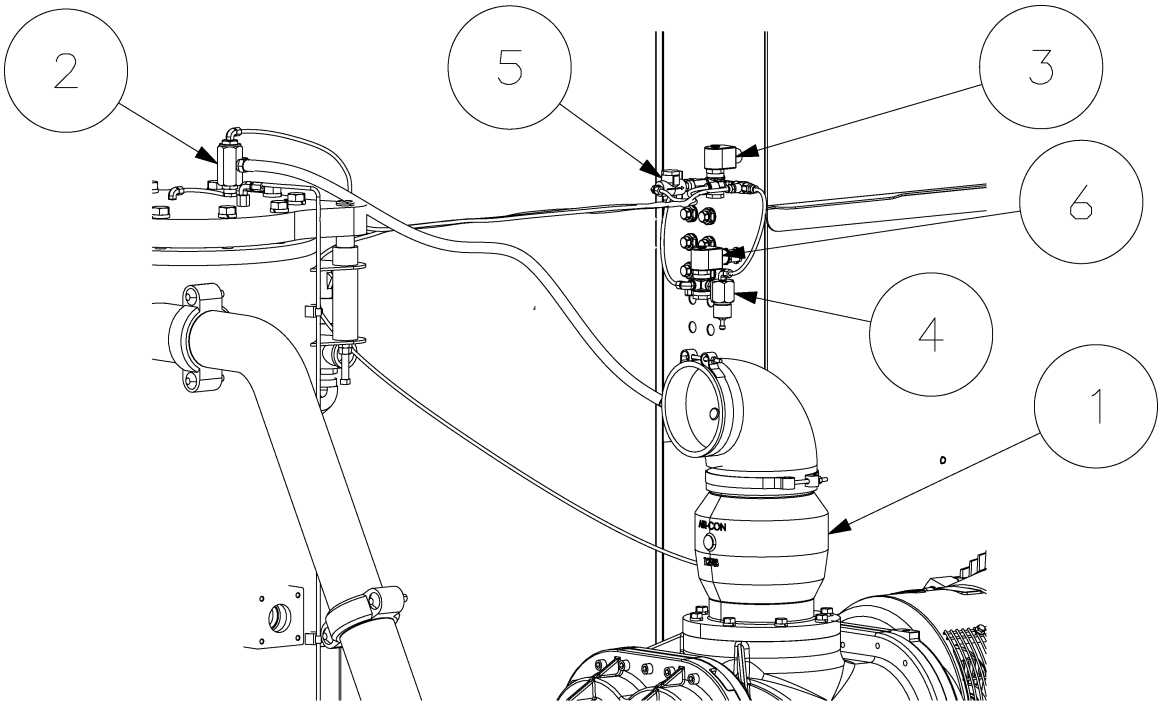

1.	Air inlet	4.	Pressure regulator valve
2.	Blowdown valve	5.	Strainer
3.	Solenoid valve	6.	Full load solenoid valve

Figure 2-3: LS90 and LS110 standard pneumatic control system

Modulating mode—110 to 120 psig (7.6 to 8.3 bar) [LS90, LS110]

If less than the rated capacity of compressed air is being used, the service line pressure will rise above 110 psig (7.6 bar). The pressure regulator valve gradually opens, directing air pressure to the inlet control valve, reducing air entering the compressor until it matches the amount of air being used. The control system functions continually in this manner between the limits of 110 to 120 psig (7.6 to 8.3 bar) in response to varying demands from the service line. The integrated inlet valve has an orifice which vents a small amount of air to the compressor inlet when the pressure regulator controls the inlet control valve. The orifice also bleeds any accumulated moisture from the control lines.

Modulating mode with spiral valve— 110 to 116 psig (7.6 to 8.0 bar) [LS90S, LS110S]

As air demand drops below rated capacity of the compressor, the line pressure will rise above 110 psig (7.6 bar). As a result the electric spiral valve motor will gradually rotate opening the bypass ports. Excess air is then being returned back internally to the suction end of the compressor unit. At this point the compressor is fully compressor only the amount of air which is being used. As air demand keeps dropping further, the spiral valve continues to open more until all of the bypass ports are fully open. At this point, the spiral valve is in the fully open (minimum capacity) position.

The spiral valve provides modulation range from 100 to 40%. This accomplished within a ±1 psig band of the set pressure. As pressure rises continues to rise after the spiral valve is in the min position, the unload setpoint of 116 psig (8.0 bar) is reached. At this point the machine transitions to the unload mode.

Unload mode—in excess of 120 psig (8.3 bar)

When a relatively small amount or no air is being used, the service line pressure continues to rise. When it exceeds 120 psig (8.3 bar), the controller control system de- energizes the solenoid valve allowing separator/ sump tank air pressure to be supplied directly to close the inlet valve. Simultaneously, the solenoid valve sends

a pneumatic signal to the blowdown valve. The blowdown valve opens to the atmosphere, located in the compressor separator/sump tank, reducing the separator/sump tank pressure to approximately 25 psig (1.72 bar). The check valve in the air service line prevents line pressure from returning to the separator/sump tank.

When the line pressure drops to the low setting (cut-in pressure; usually 110 psig (7.6 bar) on low pressure (7.6 bar) compressors and 125 psig (8.6 bar) on high pressure (9 bar) compressors, 150 psig (10.3 bar) on (10 bar) compressors, 175 psig (12.1 bar) on (12 bar) compressors), the controller energizes the solenoid valve and allows the blowdown valve to close. The re- energized solenoid valve again prevents line pressure from reaching the inlet control valve. Should the pressure begin to rise, modulating control will resume as previously described.

Load / no load control

If desired by the customer, the compressor can be set to operate load/no load without modulating control. This control mode is often selected when a large amount of compressed air storage (air tank) is available. Using the controller keypad, select **Modulate** from the menu and set it to **NO**. On a machine rated for 110 psig (7.6 bar) the compressor will run in the full load mode up to 110 psig (7.6 bar). If less than the rated capacity is required, pressure will rise above 110 psig (7.6 bar) and the controller will de- energize the solenoid valve, causing the compressor to run in the unload mode. When the system pressure falls to 100 psig (6.9 bar), the controller energizes the solenoid valve, causing the compressor to return to the full load mode. The compressor will thus operate to keep the system pressure in the range of 100 – 110 psig (6.9 – 7.6 bar).

Automatic operation

For applications with varied periods of time when there are no air requirements, the controller's **AUTOMATIC** mode allows the compressor to shutdown (time delayed) when no compressed air requirement is present and restart as compressed air is needed.

2.7 Air inlet system, functional description

Refer to *Figure 2-4*. The compressor inlet system consists of a dry-type air filter, a restriction switch and an air inlet valve.

The restriction switch (located on the air filter) indicates the condition of the air filter by sending a message to the controller when maintenance is required.

The poppet-type modulating air inlet valve directly controls the amount of air intake to the compressor in response to the operation of the pressure regulator.

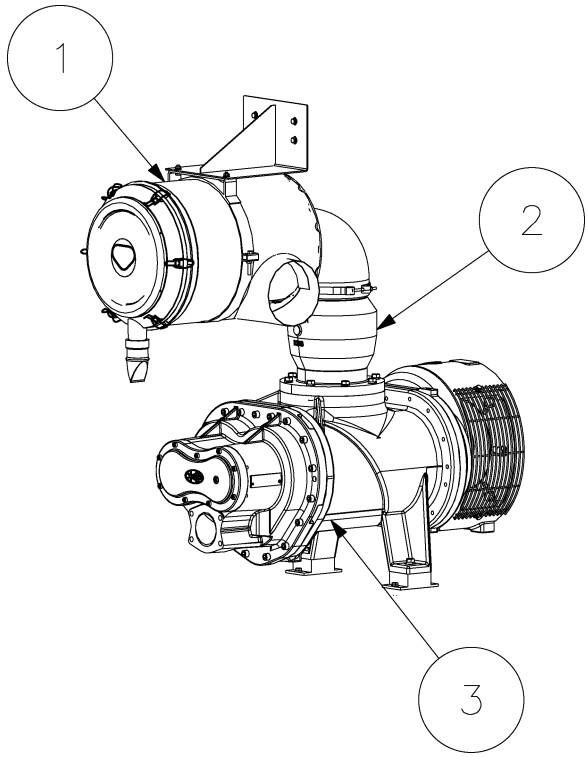

1. Air inlet filter
2. Air inlet
3. Compressor air end

Figure 2-4: Air inlet system

Refer to *Full load mode—50 to 110 psig (3.4 to 7.6 bar)* on page 18. The inlet valve also acts as a check valve, thus preventing reverse rotation when the compressor is shut down.

WARNING

"The Plastic Pipe Institute recommends against the use of thermoplastic pipe to transport compressed air or other compressed gases in exposed above ground locations, e.g. in exposed plant piping."[1]

Sullube® should not be used with PVC piping systems. It may affect the bond at cemented joints. Certain other plastic materials may also be affected.

[1]*Plastic Pipe Institute, Recommendation B. Adopted January 19, 1972.*

2.8 Variable speed drive (VSD) components

The VSD, located in the machine's electrical enclosure, works in concert with the controller to allow the compressor to match its output to the current demand of the system. The drive's heat sink extends through the back of the enclosure, and its cooled by air flowing through the compressor enclosure.

2.9 VSD control system, functional description

Refer to *Figure 2-3*. The controls consist of:

- a VSD
- a solenoid valve
- an inlet valve

Depending on the model, a compressor can be operated at a setpoint pressure from 60 to 175 psig (4.1 to 12.1 bar). The controller automatically sets the speed range based on the selected pressure. (The compressor's operating range is on its nameplate.)

The following paragraphs apply to a compressor with a 110 psig (7.6 bar) operating pressure and a 6 psi (0.4 bar) load delta setting.

NOTE

The load delta default setting is 10 psi (0.7 bar). Sullair recommends a setting of 6 psi (0.4 bar) for the most efficient operation.

Compressors with different pressure operating ranges perform in the same manner.

Start mode—0 to 50 psig (0 to 3.4 bar)

Pressing the controller start button signals the VSD to accelerate the motor to minimum speed. At the same time, the solenoid valve is open and the inlet valve closed. After a short delay, the solenoid valve is closed, inlet valve opened and the motor accelerates to maximum speed. The rising air pressure is isolated from the service line by the minimum pressure valve set at approximately 50 psig (3.4 bar).

Full load mode—50 to 110 psig (3.4 to 7.6 bar)

When the compressed air pressure rises above 50 psig (3.4 bar) the minimum pressure valve opens allowing compressed air to flow into to the service line. From this point on the controller monitors the line pressure which controls the VSD. The solenoid valve remains closed with the inlet valve fully open, running at 110 psig (7.6 bar) or lower.

VSD part load control

The service line pressure increases to a value above 110 psig (7.6 bar) if the demand is less than the compressor's rated capacity. In this condition, the VSD slows the motor's rpm which reduces the output to match the demand. The drive continuously adjusts the motor's rpm to maintain a 110 psig (7.6 bar) line pressure.

Unload mode—in excess of 116 psig (8.0 bar)

When there is no demand or it is at a minimal level, the service line pressure continues to rise. When it exceeds 116 psig (8.0 bar), or reaches a preset unload pressure value, the control system de-energizes the solenoid valve allowing separator/sump tank air pressure to be supplied directly which closes the inlet valve. The solenoid valve simultaneously sends a pneumatic signal to the blow down valve which opens to the atmosphere, and reduces the separator/sump tank pressure. The check valve in the air service line prevents line pressure from back-flowing to the separator/sump tank. The compressor will shut down after the programmed unload time setting expires. When the line pressure drops to the low pressure setting of 110 psig (7.6 bar) the controller starts the motor and energizes the solenoid valve which closes the blowdown valve. The re-energized solenoid valve prevents line pressure from reaching the inlet control valve, thereby allowing it to fully open, and the compressor supplies compressed air to the system.

Notes:

Section 3
Specifications

3.1 Tables of specifications—LS90 & LS110

Table 3-1: Models, powers, and weights—LS90 & LS110

			Weight[1]											
			Air-cooled						Water-cooled					
	Nominal main motor power		Enclosed		Enclosed w/ weather hood		Open		Enclosed		Enclosed w/ weather hood		Open	
Model	hp	kw	lb	kg	lb	kg	lb	kg	lb	kg	lb	kg	lb	kg
LS90	125	90	5830	2650	5976	2717	5262	2387	5780	2627	5926	2694	5125	2325
LS90S	125	90	5954	2706	6100	2773	5386	2443	5904	2683	6050	2750	5249	2381
LS90V	125	90	5908	2685	6054	2752	5340	2422	5858	2663	6004	2729	5203	2360
LS110	150	110	6007	2730	6153	2797	5439	2467	5957	2708	6103	2774	5302	2405
LS110S	150	110	6161	2800	6307	2867	5593	2537	6111	2778	6257	2844	5456	2475
LS110V	150	110	6084	2765	6230	2832	5516	2502	6034	2743	6180	2809	5379	2440

[1]Weights based on typical model.

Table 3-2: Enclosures and dimensions—LS90 & LS110

	Length		Width		Height	
Enclosure	in	mm	in	mm	in	mm
Enclosed (air- and water-cooled)	99	2509	69	1760	70	1773
Enclosed with optional weather hood (air- and water-cooled)	99	2509	69	1760	89	2258
Open (air- and water-cooled)	97	2470	68	1715	68	1722

Table 3-3: Compressor specifications—LS90 & LS110

Compressor	Standard models
Type	Rotary screw
Standard operating pressure	110 psig (7.6 bar) / 125 psig (9 bar) / 150 psig (10 bar) / 175 psig (12 bar)
Maximum ambient temperature[1]	115°F (46°C)
Minimum ambient temperature	40°F (4.4°C)
Cooling	Pressurized fluid
Compressor fluid	Sullair Sullube®, PristineFG™
Separator/sump capacity	9 gallons (34 liters)
Control	10" touchscreen

[1]Special compressors are available for operation in higher ambient temperature.

Table 3-4: Motor specifications—LS90 & LS110

Motor	Standard models
Size	125, 150 hp / 90, 110 kW
Type	C-flanged, totally enclosed fan cooled, premium efficiency, three phase, 230/460V 60 Hz
Maximum ambient temperature	104°F (40°C)
Minimum ambient temperature	40°F (4.4°C)
Available options	575V 60 Hz
Starter	Wye-delta or VSD
Speed—125, 150 hp (90, 110 kW)	1780 rpm (60 Hz)
Multi-frequency and voltage motors are used. The compressors must be used only with the specified electrical frequency and voltage.	

3.2 Lubrication guide

Refer to *Figure 3-1* for location of fluid fill port. For best value and longest uninterrupted service, Sullair compressors are factory filled and tested with Sullube® lubricant.

WARRANTY NOTICE

Mixing of other lubricants within the compressor unit will void all warranties.

If fluid change is required, follow *Section 3.4: Lubrication change recommendations and maintenance, fluid* on page 25.

WARNING

"The Plastic Pipe Institute recommends against the use of thermoplastic pipe to transport compressed air or other compressed gases in exposed above ground locations, e.g. in exposed plant piping."[1]

Sullube® should not be used with PVC piping systems. It may affect the bond at cemented joints. Certain other plastic materials may also be affected.

[1]*Plastic Pipe Institute, Recommendation B. Adopted January 19, 1972.*

WARNING

Maintenance of all other components is still recommended as indicated in the User's Manual.

Do not mix different types of fluids. Contamination of compressor fluid with mineral oil or other fluids may lead

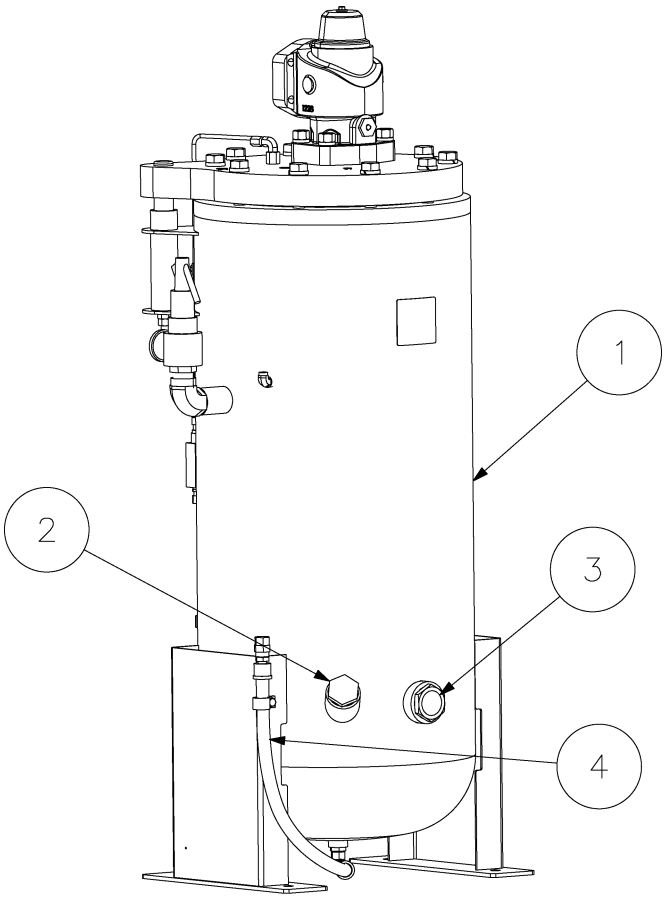

1. Tank
2. Fluid fill port
3. Sight glass
4. Fluid drain hose

Figure 3-1: Fluid fill location

to operational problems such as foaming, filter plugging, orifice or line plugging.

NOTE

Flush system when switching lubricant brands.

When ambient conditions exceed those noted or if conditions warrant use of extended life lubricants contact Sullair for recommendation.

3.3 Application guide

As part of fluid testing program, Sullair requires the customer to work with the local authorized distributor on the fluid sampling program. Contact your Sullair dealer for more details.

3.4 Lubrication change recommendations and maintenance, fluid

Lubricant	Fluid change	Fluid filter change	Separator change
Sullube® (14.5 gal / 54.9 L)	E, I	G, C	I, D
PristineFG™ (14.5 gal / 54.9 L)	H, E	G, C	I, D

C—When measured pressure loss exceeds 20 psig (1.3 bar).
D—When measured pressure loss exceeds 10 psig (0.7 bar).
E—When required by fluid analysis or known contamination.
G—Every 2,000 hours.
H—Every 6,000 hours or once a year.
I—Every 8,000 hours or once a year.

3.5 ID, air-cooled, enclosed

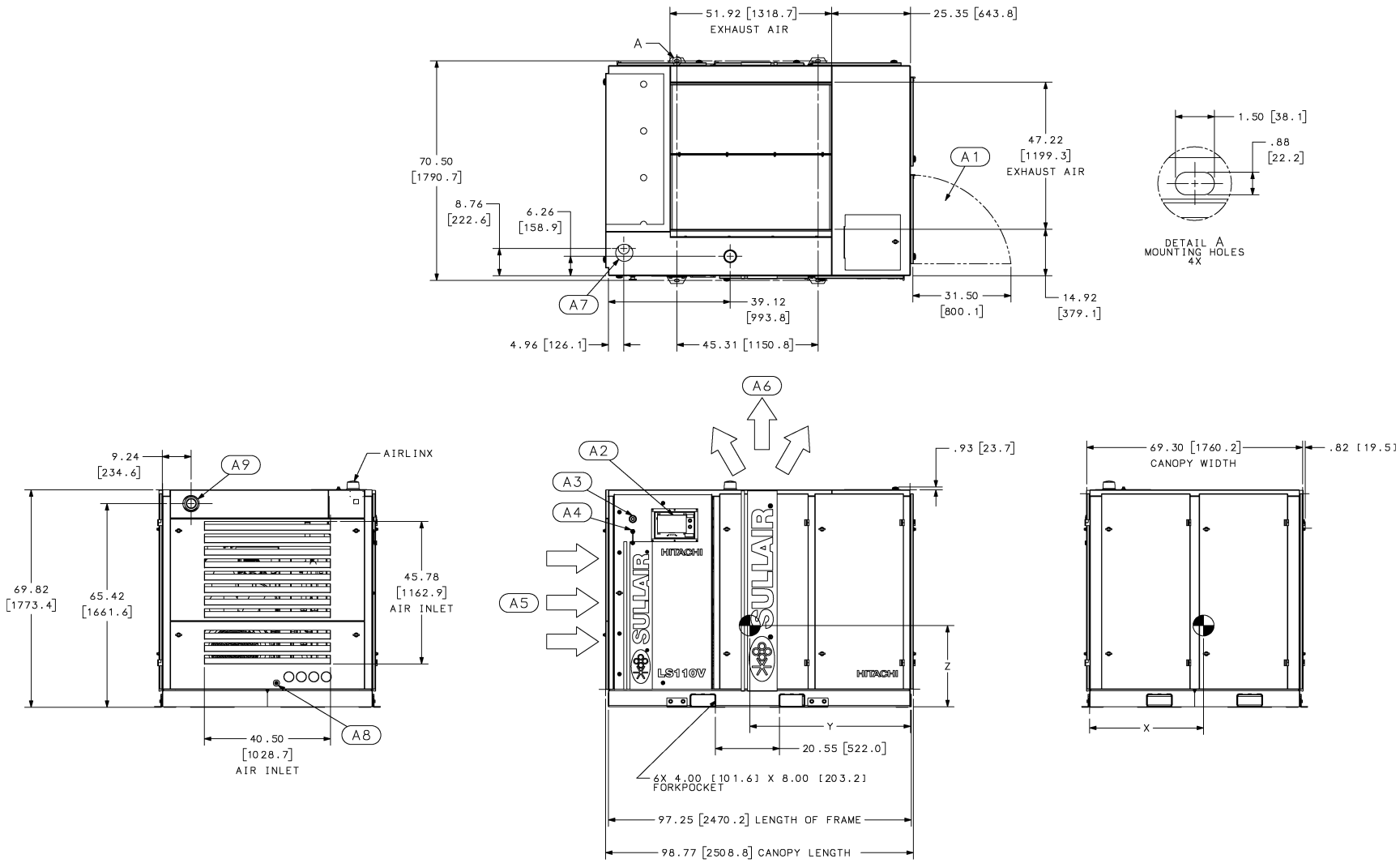

3.5 ID, air-cooled, enclosed

Drawing notes	
1	ALLOW 4.00 FEET [1.25 METERS] MINIMUM CLEARANCE AROUND MACHINE FOR ACCESS AND FREE CIRCULATION OF AIR.
2	A FOUNDATION OR MOUNTING CAPABLE OF SUPPORTING THE WEIGHT OF PACKAGE, AND RIGID ENOUGH TO MAINTAIN THE COMPRESSOR FRAME LEVEL IS REQUIRED. THE COMPRESSOR FRAME MUST BE LEVELLED AND SECUREDBETWEEN THE FRAME AND THE FOUNDATION. NO PIPING LOADS ARE PERMITTED AT EXTERNAL CONNECTIONS.
3	ALL DIMENSIONS ARE ± .50" [12.7MM].
4	RECOMMENDED INCOMING CUSTOMER POWER SUPPLY IS SHOWN ON DRAWING.
5	ALL DIMENSIONS SHOWN IN INCHES WITH MILLIMETER DIMENSIONS IN PARENTHESES.
A1	SPACE REQUIRED TO OPEN DOORS
A2	CONTROLLER
A3	E-STOP
A4	USB
A5	AIR INLET
A6	EXHAUST AIR OUT
A7	INCOMING CUSTOMER POWER SUPPLY Φ2.31 (Φ58.71)
A8	MOISTURE DRAIN CONNECTION 1/2” NPT
A9	AIR OUT CONNECTION 3” NPT

3.6 ID, air-cooled, enclosed with optional weather hood

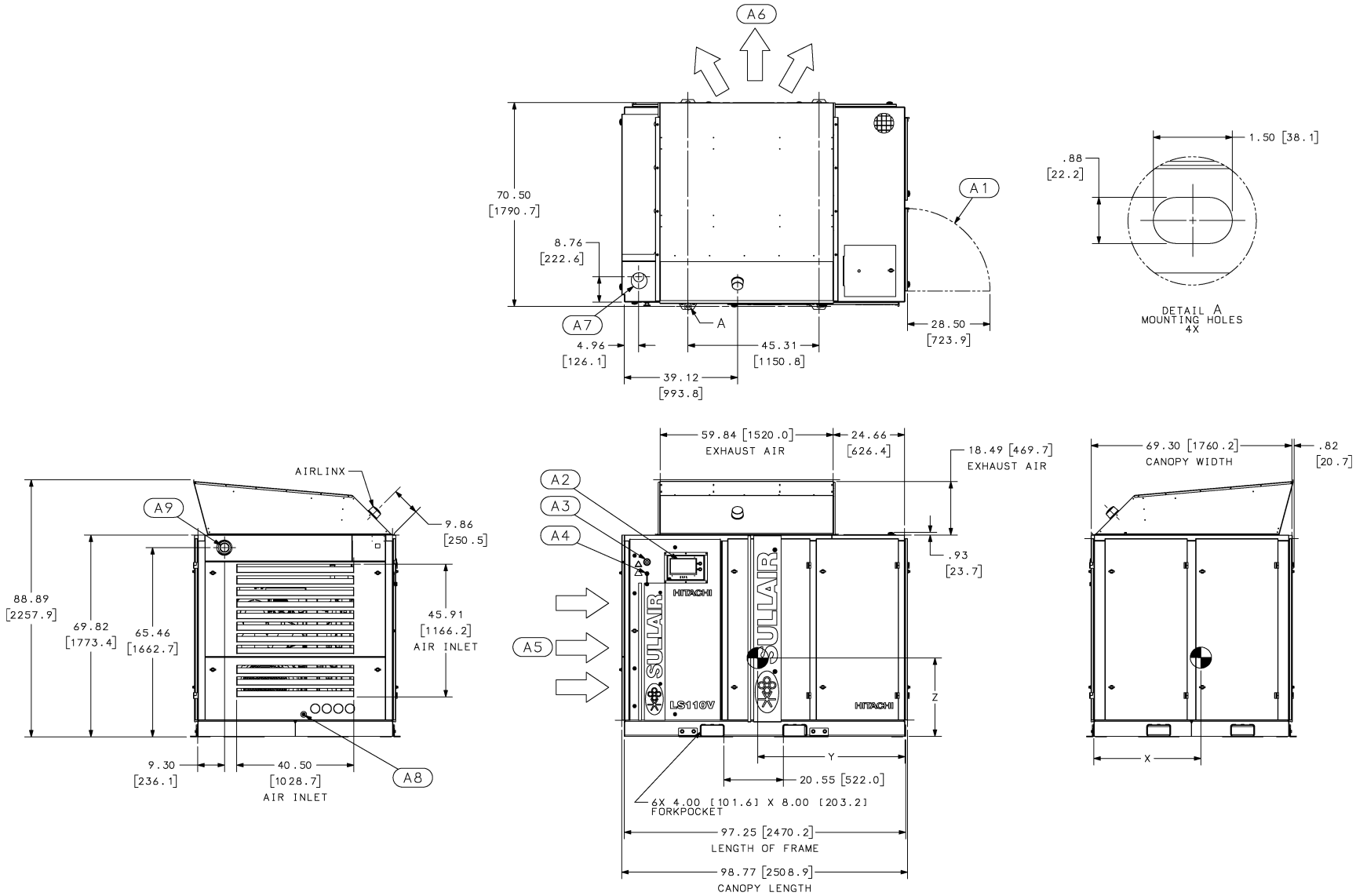

1004-5360 R01

3.6 ID, air-cooled, enclosed with optional weather hood

Drawing notes	
1	ALLOW 4.00 FEET [1.25 METERS] MINIMUM CLEARANCE AROUND MACHINE FOR ACCESS AND FREE CIRCULATION OF AIR.
2	A FOUNDATION OR MOUNTING CAPABLE OF SUPPORTING THE WEIGHT OF PACKAGE, AND RIGID ENOUGH TO MAINTAIN THE COMPRESSOR FRAME LEVEL IS REQUIRED. THE COMPRESSOR FRAME MUST BE LEVELLED AND SECURED BETWEEN THE FRAME AND THE FOUNDATION. NO PIPING LOADS ARE PERMITTED AT EXTERNAL CONNECTIONS.
3	ALL DIMENSIONS ARE ± .50" [12.7MM].
4	RECOMMENDED INCOMING CUSTOMER POWER SUPPLY IS SHOWN ON DRAWING.
5	ALL DIMENSIONS SHOWN IN INCHES WITH MILLIMETER DIMENSIONS IN PARENTHESES.
A1	SPACE REQUIRED TO OPEN DOORS
A2	CONTROLLER
A3	E-STOP
A4	USB
A5	AIR INLET
A6	EXHAUST AIR OUT
A7	INCOMING CUSTOMER POWER SUPPLY Φ2.31 (Φ58.71)
A8	MOISTURE DRAIN CONNECTION 1/2” NPT
A9	AIR OUT CONNECTION 3” NPT

3.7 ID, air-cooled, open

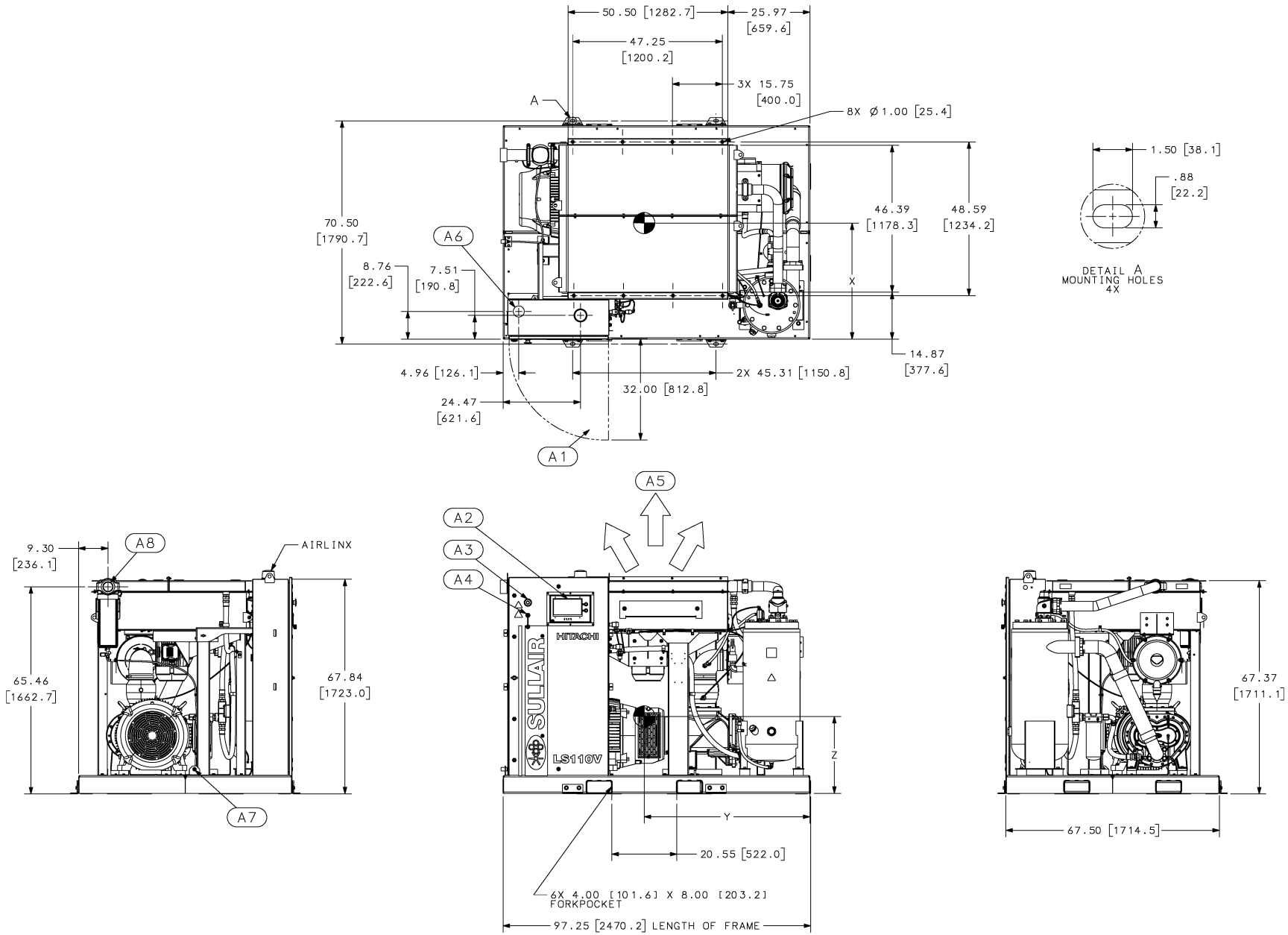

1004-5358 R01

3.7 ID, air-cooled, open

Drawing notes	
1	ALLOW 4.00 FEET [1.25 METERS] MINIMUM CLEARANCE AROUND MACHINE FOR ACCESS AND FREE CIRCULATION OF AIR.
2	A FOUNDATION OR MOUNTING CAPABLE OF SUPPORTING THE WEIGHT OF PACKAGE, AND RIGID ENOUGH TO MAINTAIN THE COMPRESSOR FRAME LEVEL IS REQUIRED. THE COMPRESSOR FRAME MUST BE LEVELLED AND SECURED BETWEEN THE FRAME AND THE FOUNDATION. NO PIPING LOADS ARE PERMITTED AT EXTERNAL CONNECTIONS.
3	ALL DIMENSIONS ARE ± .50" [12.7MM].
4	RECOMMENDED INCOMING CUSTOMER POWER SUPPLY IS SHOWN ON DRAWING.
5	ALL DIMENSIONS SHOWN IN INCHES WITH MILLIMETER DIMENSIONS IN PARENTHESES.
A1	SPACE REQUIRED TO OPEN DOORS
A2	CONTROLLER
A3	E-STOP
A4	USB
A5	EXHAUST AIR OUT
A6	INCOMING CUSTOMER POWER SUPPLY Φ2.31 (Φ58.71)
A7	MOISTURE DRAIN CONNECTION 1/2” NPT
A8	AIR OUT CONNECTION 3” NPT

3.8 ID, water-cooled, enclosed

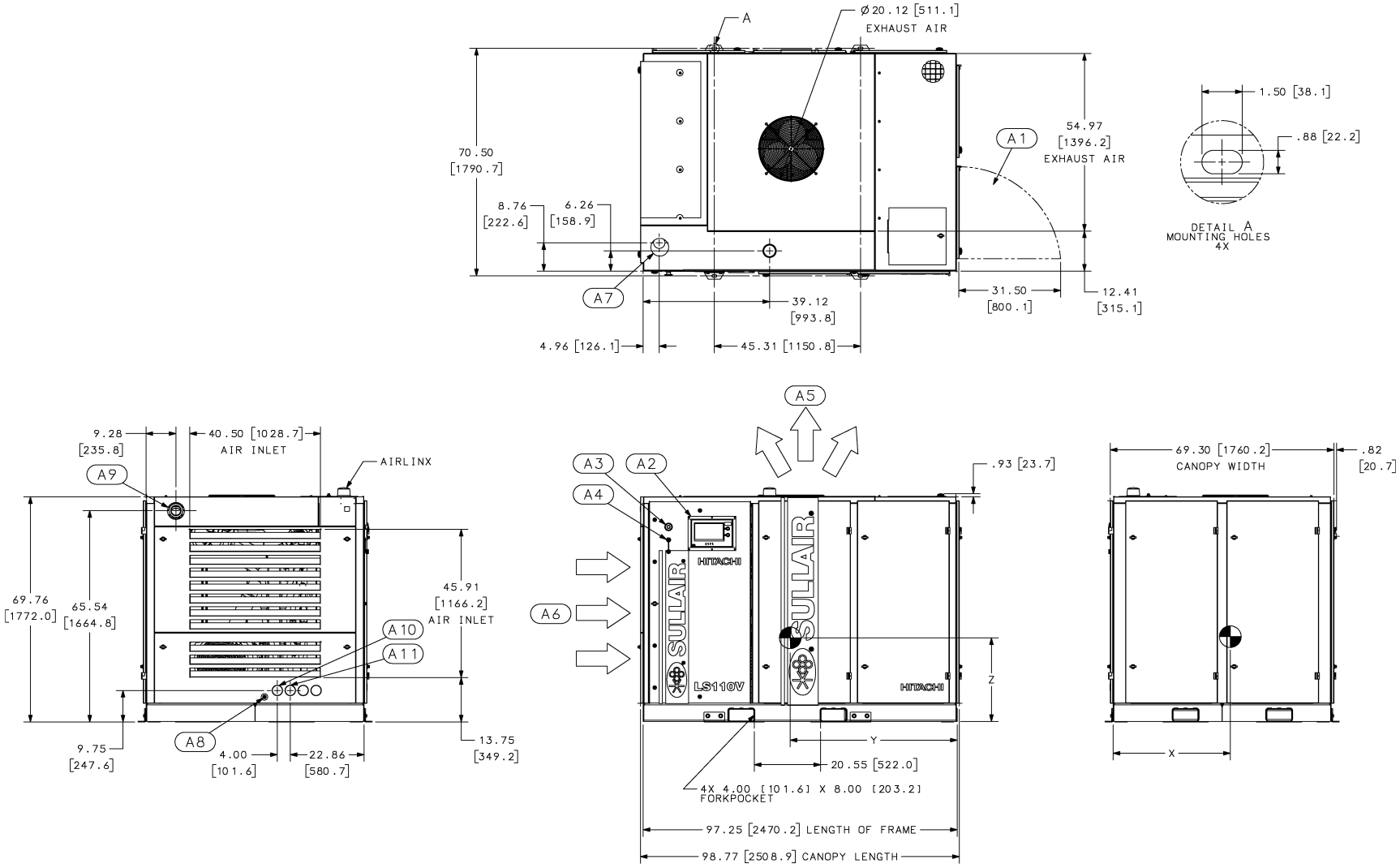

3.8 ID, water-cooled, enclosed

Drawing notes	
1	ALLOW 4.00 FEET [1.25 METERS] MINIMUM CLEARANCE AROUND MACHINE FOR ACCESS AND FREE CIRCULATION OF AIR.
2	A FOUNDATION OR MOUNTING CAPABLE OF SUPPORTING THE WEIGHT OF PACKAGE, AND RIGID ENOUGH TO MAINTAIN THE COMPRESSOR FRAME LEVEL IS REQUIRED. THE COMPRESSOR FRAME MUST BE LEVELLED AND SECURED BETWEEN THE FRAME AND THE FOUNDATION. NO PIPING LOADS ARE PERMITTED AT EXTERNAL CONNECTIONS.
3	ALL DIMENSIONS ARE ± .50" [12.7MM].
4	RECOMMENDED INCOMING CUSTOMER POWER SUPPLY IS SHOWN ON DRAWING.
5	ALL DIMENSIONS SHOWN IN INCHES WITH MILLIMETER DIMENSIONS IN PARENTHESES.
A1	SPACE REQUIRED TO OPEN DOORS
A2	CONTROLLER
A3	E-STOP
A4	USB
A5	AIR INLET
A6	EXHAUST AIR OUT
A7	INCOMING CUSTOMER POWER SUPPLY Φ2.31 (Φ58.71)
A8	MOISTURE DRAIN CONNECTION 1/2” NPT
A9	AIR OUT CONNECTION 3” NPT
A10	WATER IN 1 - 1/2” NPT
A11	WATER OUT 1 - 1/2” NPT

3.9 ID, water-cooled, enclosed with optional weather hood

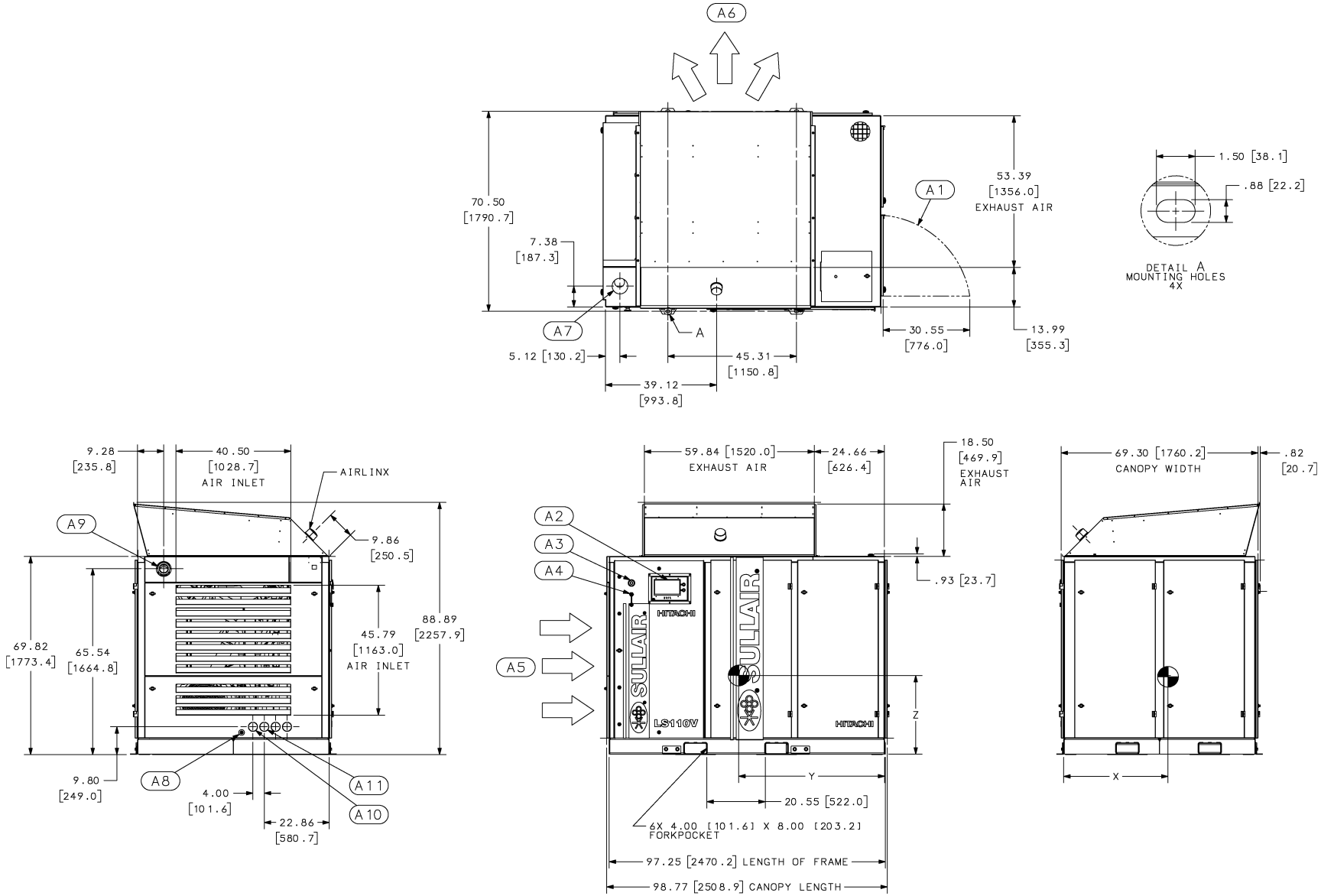

1004-5362 R01

3.9 ID, water-cooled, enclosed with optional weather hood

Drawing notes	
1	ALLOW 4.00 FEET [1.25 METERS] MINIMUM CLEARANCE AROUND MACHINE FOR ACCESS AND FREE CIRCULATION OF AIR.
2	A FOUNDATION OR MOUNTING CAPABLE OF SUPPORTING THE WEIGHT OF PACKAGE, AND RIGID ENOUGH TO MAINTAIN THE COMPRESSOR FRAME LEVEL IS REQUIRED. THE COMPRESSOR FRAME MUST BE LEVELLED AND SECURED BETWEEN THE FRAME AND THE FOUNDATION. NO PIPING LOADS ARE PERMITTED AT EXTERNAL CONNECTIONS.
3	ALL DIMENSIONS ARE ± .50" [12.7MM].
4	RECOMMENDED INCOMING CUSTOMER POWER SUPPLY IS SHOWN ON DRAWING.
5	ALL DIMENSIONS SHOWN IN INCHES WITH MILLIMETER DIMENSIONS IN PARENTHESES.
A1	SPACE REQUIRED TO OPEN DOORS
A2	CONTROLLER
A3	E-STOP
A4	USB
A5	AIR INLET
A6	EXHAUST AIR OUT
A7	INCOMING CUSTOMER POWER SUPPLY Φ2.31 (Φ58.71)
A8	MOISTURE DRAIN CONNECTION 1/2” NPT
A9	AIR OUT CONNECTION 3” NPT
A10	WATER IN 1 - 1/2” NPT
A11	WATER OUT 1 - 1/2” NPT

3.10 ID, water-cooled, open

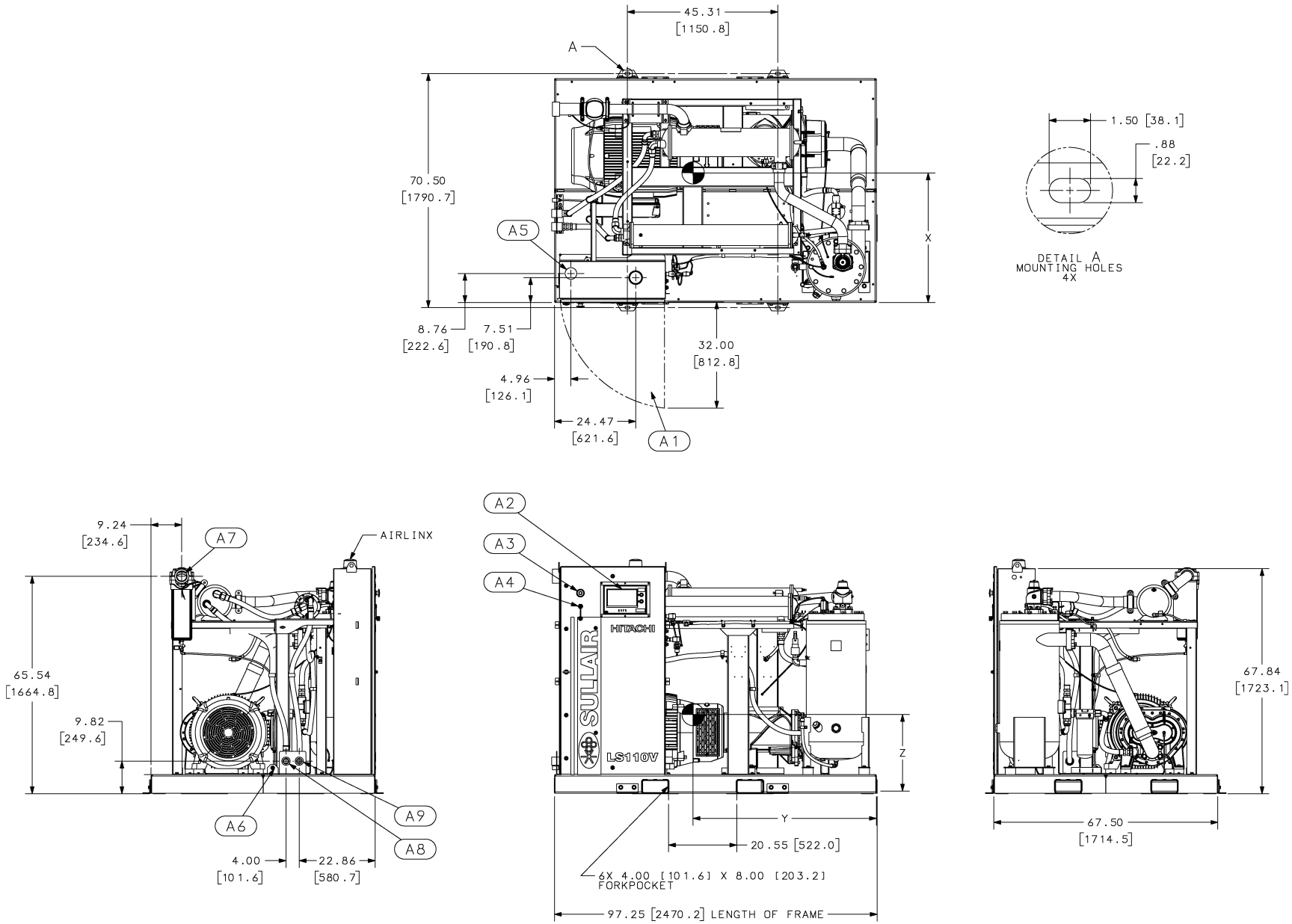

1004-5359 R01

Subject to EAR, ECCN EAR99 and related export control restrictions.

3.10 ID, water-cooled, open

Drawing notes	
1	ALLOW 4.00 FEET [1.25 METERS] MINIMUM CLEARANCE AROUND MACHINE FOR ACCESS AND FREE CIRCULATION OF AIR.
2	A FOUNDATION OR MOUNTING CAPABLE OF SUPPORTING THE WEIGHT OF PACKAGE, AND RIGID ENOUGH TO MAINTAIN THE COMPRESSOR FRAME LEVEL IS REQUIRED. THE COMPRESSOR FRAME MUST BE LEVELLED AND SECURED BETWEEN THE FRAME AND THE FOUNDATION. NO PIPING LOADS ARE PERMITTED AT EXTERNAL CONNECTIONS.
3	ALL DIMENSIONS ARE ± .50" [12.7MM].
4	RECOMMENDED INCOMING CUSTOMER POWER SUPPLY IS SHOWN ON DRAWING.
5	ALL DIMENSIONS SHOWN IN INCHES WITH MILLIMETER DIMENSIONS IN PARENTHESES.
A1	SPACE REQUIRED TO OPEN DOORS
A2	CONTROLLER
A3	E-STOP
A4	USB
A5	INCOMING CUSTOMER POWER SUPPLY Φ2.31 (Φ58.71)
A6	MOISTURE DRAIN CONNECTION 1/2” NPT
A7	AIR OUT CONNECTION 3” NPT
A8	WATER IN 1 - 1/2” NPT
A9	WATER OUT 1 - 1/2” NPT

3.11 Piping & instrumentation, air-cooled wye-delta

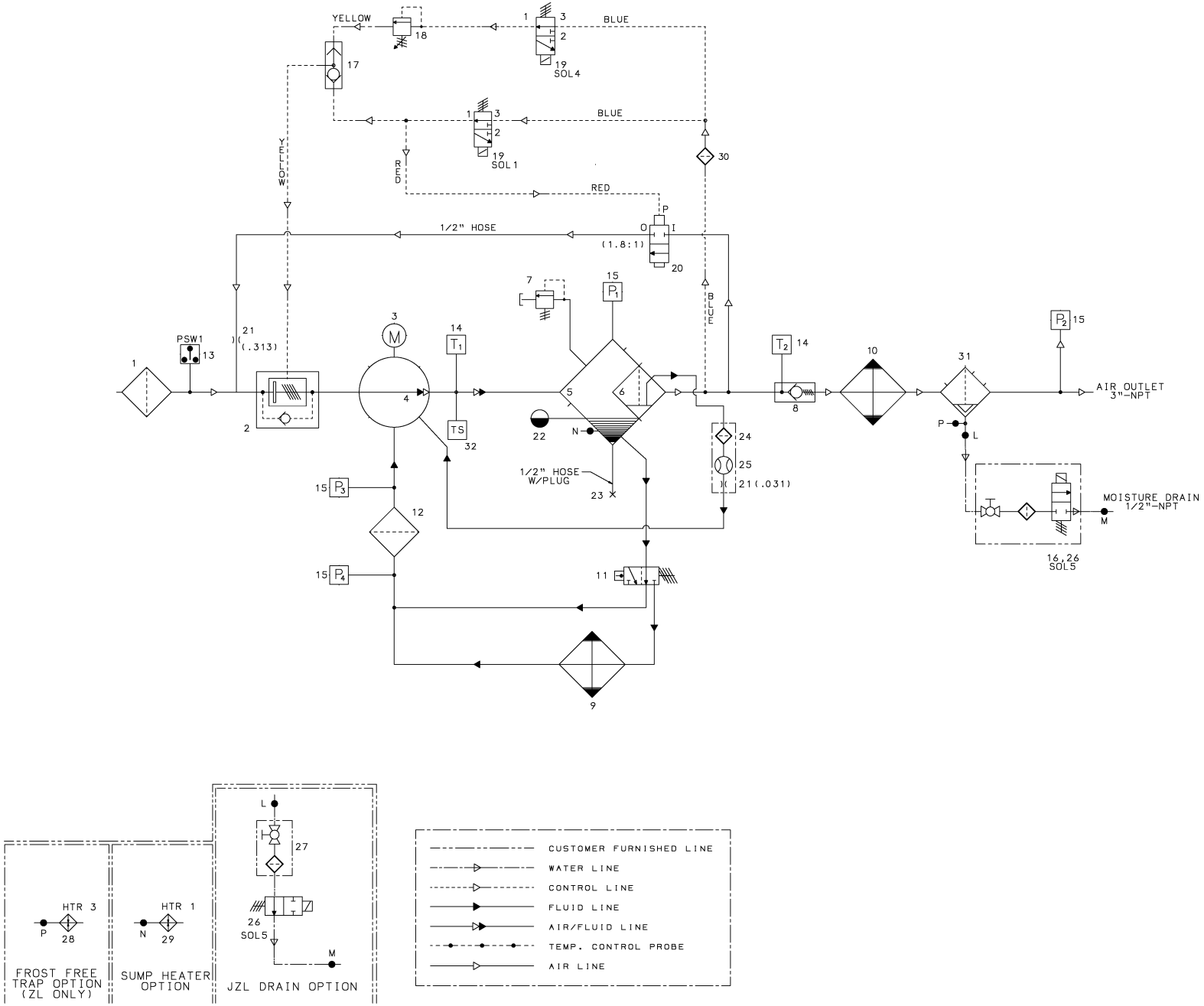

02250225-401 R02

3.11 Piping & instrumentation, air-cooled wye-delta

Key	Description	Qty
01	FILTER,AIR INLET	1
02	VALVE, AIR INLET	1
03	MOTOR	1
04	COMPR	1
05	TANK, OIL SEP	1
06	ELEMENT, AIR/OIL SEP	1
07	VALVE, RELIEF	1
08	VALVE,MINIMUM PRESSURE	1
09	COOLER,OIL	1
10	COOLER, AIR	1
11	ELEMENT, THERMAL VLV	1
12	FILTER, COMPR OIL	1
13	SWITCH, VAC	1
14	PROBE, THERMISTER	2
15	TRANSDUCER, PRESS	4
16	VALVE, DRAIN	1
17	VALVE, SHUTTLE	2
18	VALVE, BACK PRESSURE	1
19	VALVE,SOLENOID 3WNO	2
20	VALVE, BLOWDOWN	1
21	ORIFICE	2
22	PLUG, SIGHT GLASS	1
23	DRAIN, SEP TANK	1
24	FILTER, SCAVENGE	1
25	SIGHTGLASS, SCAVENGE	1
26	DRAIN, ZERO LOSS	1
27	VALVE, BALL/STNR COMBO	1
28	HEATER, ZL	1
29	HEATER, SUMP	1
30	STRAINER	1
31	SEPARATOR, H2O	1
32	TEMPERATURE SWITCH (CE MACHINE ONLY)	1

Drawing notes

1	SECTION BETWEEN LETTERED POINTS ARE TO BE REPLACED WITH CORRESPONDING OPTION PICTURED BELOW, AS REQUIRED BY FACE OF ORDER.
2	OPTIONAL HEAT TRACE IS APPLIED ONLY TO CONTROL AND MOISTURE DRAIN LINES AND USED ONLY WITH STAINLESS STEEL TUBING.
3	PARTS VARY BY MODEL.

Components

Component	Description
P1	WET SUMP PRESSURE
P2	LINE PRESSURE
P3	INJECTION FLUID PRESSURE
P4	HIGH PRESSURE SIDE OF FLUID FILTER
PSW1	INLET FILTER VACUUM SWITCH
SOL1	LOAD/UNLOAD SOLENOID VALVE
SOL4	MEC/SEQUENCING/FULL LOAD SOLENOID VALVE (FULL VOLTAGE)
SOL5	COMBO DRAIN/JZL DRAIN SOLENOID VALVE
SOL7	EES SOLENOID VALVE (OPTIONAL)
T1	WET DISCHARGE TEMPERATURE
T2	DRY DISCHARGE TEMPERATURE
HTR1	SUMP HEATER
HTR3	TRAP HEATER

3.12 Piping & instrumentation, air-cooled, VSD spiral valve

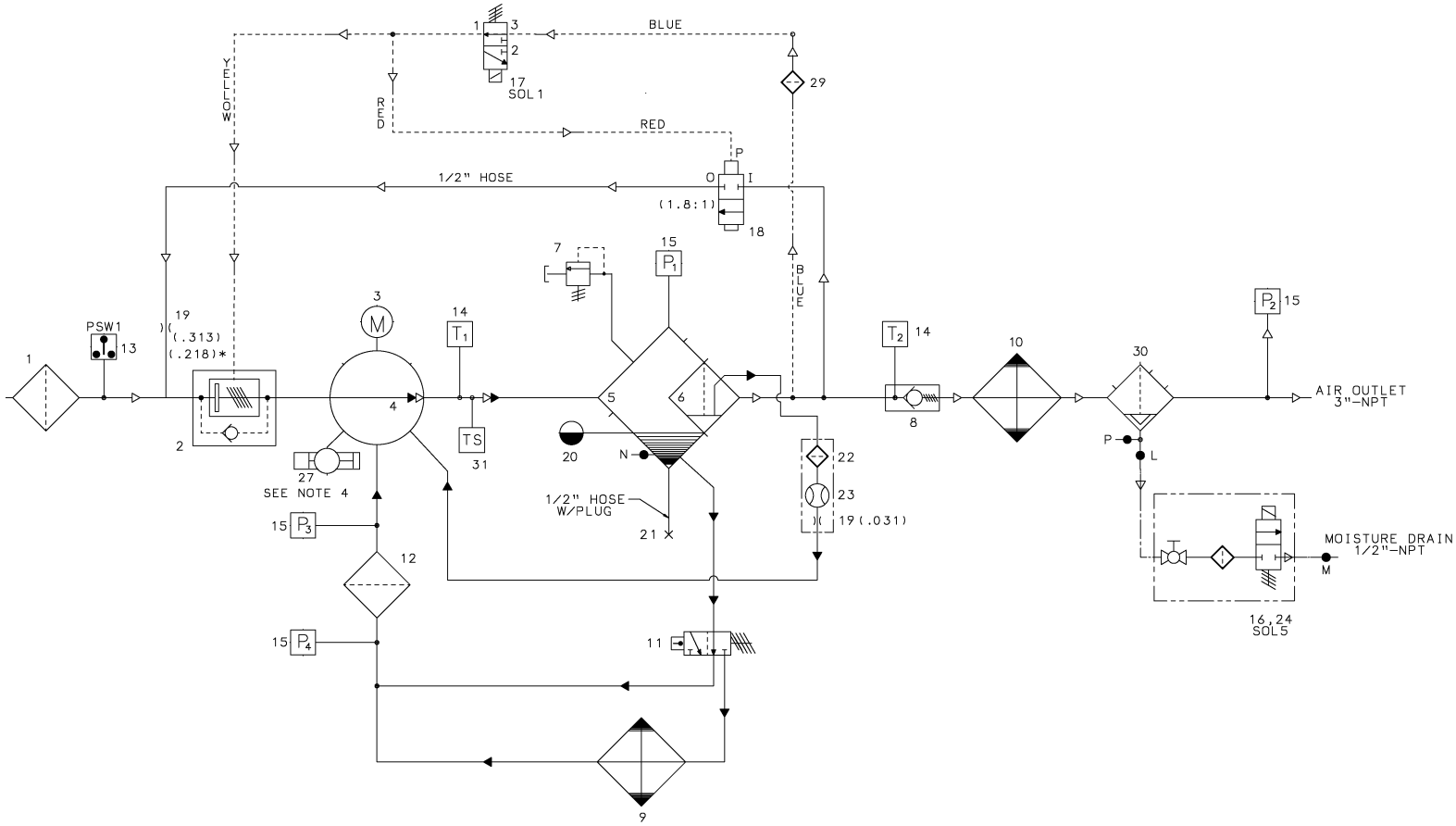

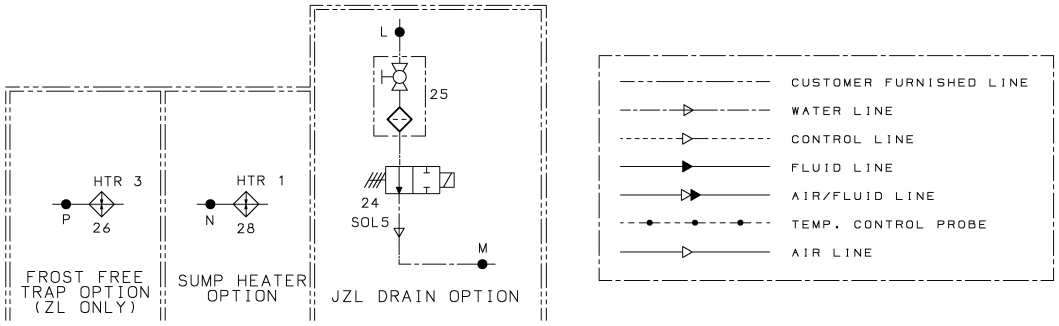

02250225-400 R04

3.12 Piping & instrumentation, air-cooled, VSD spiral valve

Key	Description	Qty
01	FILTER,AIR INLET	1
02	VALVE, AIR INLET	1
03	MOTOR	1
04	COMPR	1
05	TANK, OIL SEP	1
06	ELEMENT, AIR/OIL SEP	1
07	VALVE, RELIEF	1
08	VALVE,MINIMUM PRESSURE	1
09	COOLER,OIL	1
10	COOLER, AIR	1
11	ELEMENT, THERMAL VLV	1
12	FILTER, COMPR OIL	1
13	SWITCH, VAC	1
14	PROBE, THERMISTER	2
15	TRANSDUCER, PRESS	4
16	VALVE, DRAIN	1
17	VALVE,SOLENOID 3WNO	1
18	VALVE, BLOWDOWN	1
19	ORIFICE	2
20	PLUG, SIGHT GLASS	1
21	DRAIN, SEP TANK	1
22	FILTER, SCAVENGE	1
23	SIGHTGLASS, SCAVENGE	1
24	DRAIN, ZERO LOSS	1
25	VALVE, BALL/STNR COMBO	1
26	HEATER, ZL	1
27	VALVE, SPRIAL	1
28	HEATER, SUMP	1
29	STRAINER	1
30	SEPARATOR, H2O	1
31	TEMPERATURE SWITCH (CE MACHINE ONLY)	1

Drawing notes

1	SECTION BETWEEN LETTERED POINTS ARE TO BE REPLACED WITH CORRESPONDING OPTION PICTURED BELOW, AS REQUIRED BY FACE OF ORDER.
2	OPTIONAL HEAT TRACE IS APPLIED ONLY TO CONTROL AND MOISTURE DRAIN LINES AND USED ONLY WITH STAINLESS STEEL TUBING.
3	PARTS VARY BY MODEL.
4	VCC MODELS ONLY.

Components

Component	Description
P1	WET SUMP PRESSURE
P2	LINE PRESSURE
P3	INJECTION FLUID PRESSURE
P4	HIGH PRESSURE SIDE OF FLUID FILTER
PSW1	INLET FILTER VACUUM SWITCH
SOL1	LOAD/UNLOAD SOLENOID VALVE
SOL5	COMBO DRAIN/JZL DRAIN SOLENOID VALVE
SOL7	EES SOLENOID VALVE (OPTIONAL)
T1	WET DISCHARGE TEMPERATURE
T2	DRY DISCHARGE TEMPERATURE
HTR1	SUMP HEATER
HTR3	TRAP HEATER

3.13 Piping & instrumentation, water-cooled wye-delta

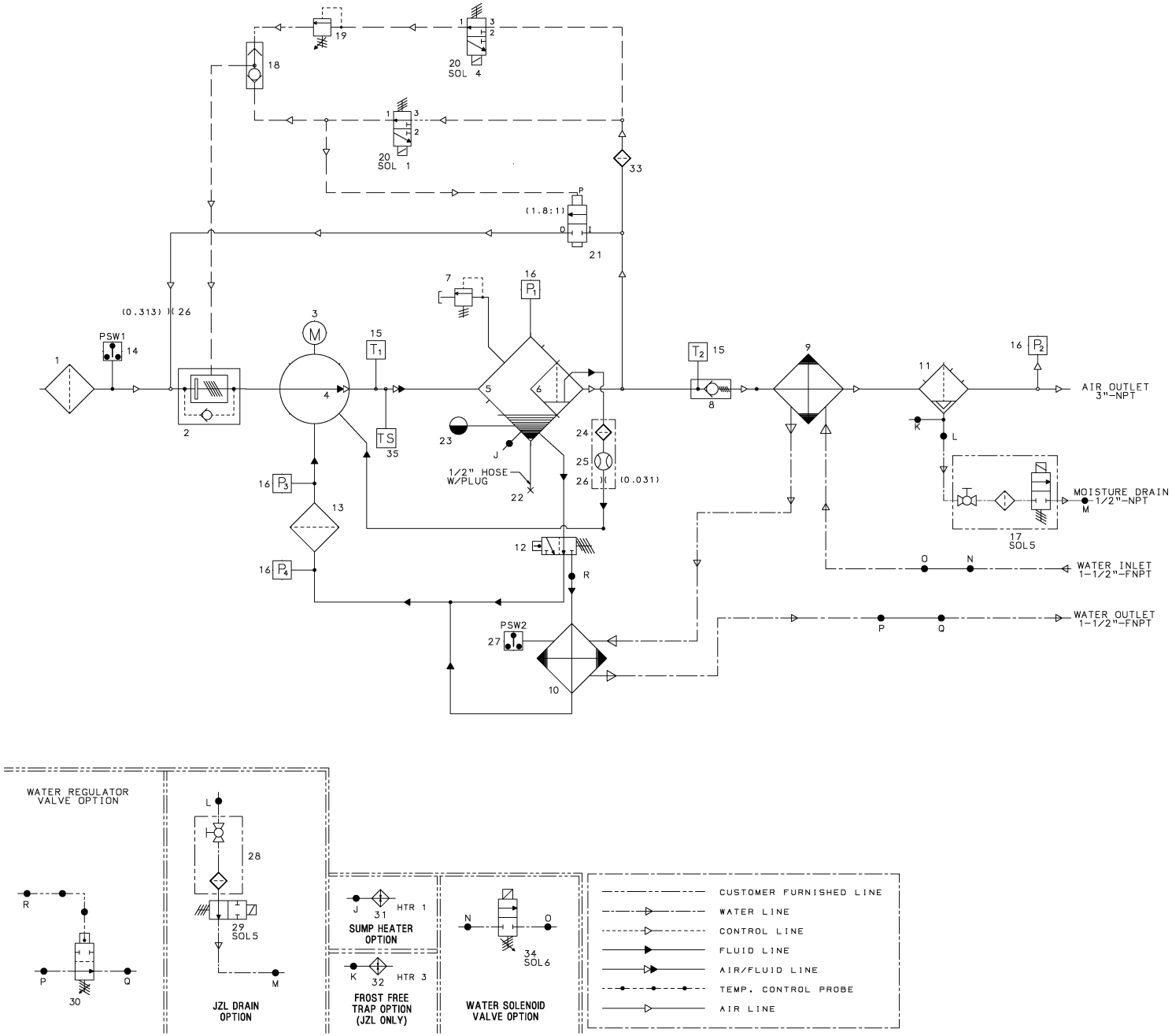

02250228-723 R02

3.13 Piping & instrumentation, water-cooled wye-delta

Key	Description	Qty
01	FILTER, AIR INLET	1
02	VALVE, AIR INLET	1
03	MOTOR	1
04	COMPRESSOR	1
05	TANK, OIL SEP	1
06	ELEMENT, AIR/OIL SEP	1
07	VALVE, RELIEF	1
08	VALVE,MINIMUM PRESSURE	1
09	COOLER, AIR	1
10	COOLER,OIL	1
11	SEPARATOR, H2O	1
12	ELEMENT, THERMAL VLV	1
13	FILTER, COMPR OIL	1
14	SWITCH, VAC	1
15	PROBE, THERMISTER	2
16	TRANSDUCER, PRESSURE	4
17	VALVE, DRAIN	1
18	VALVE, SHUTTLE	1
19	VALVE, BACK PRESSURE	1
20	VALVE,SOLENOID 3WNO	2
21	VALVE, BLOWDOWN	1
22	DRAIN, SEP TANK	1
23	PLUG, SIGHTGLASS	1
24	FILTER, SCAVENGE	1
25	SIGHTGLASS, SCAVENGE	1
26	ORIFICE	2
27	SWITCH, PRESSURE	1
28	VALVE, BALL/STNR COMBO	1
29	DRAIN, ZERO LOSS	1
30	VALVE, WATER REG	1

Key	Description	Qty
31	HEATER, SEP TNK	1
32	HEATER, ZL	1
33	STRAINER	1
34	VALVE,SOLENOID WATER	1
35	TEMPERATURE SWITCH (CE MACHINES ONLY)	1

Drawing notes

1	SECTION BETWEEN LETTERED POINTS ARE TO BE REPLACED WITH CORRESPONDING OPTION PICTURED BELOW, AS REQUIRED BY FACE OF ORDER.
2	OPTIONAL HEAT TRACE IS APPLIED ONLY TO CONTROL AND MOISTURE DRAIN LINES AND USED ONLY WITH STAINLESS STEEL TUBING.
3	PART VARIES BY MODEL.

Components

Component	Description
P1	WET SUMP PRESSURE
P2	LINE PRESSURE
P3	INJECTION FLUID PRESSURE
P4	HIGH PRESSURE SIDE OF FLUID FILTER
PSW1	INLET FILTER VACUUM SWITCH
PSW2	WATER PRESSURE SWITCH
SOL1	LOAD/UNLOAD SOLENOID VALVE
SOL4	MEC/SEQUENCING/FULL LOAD SOLENOID VALVE (OPTIONAL)
SOL5	COMBO DRAIN/JZL DRAIN SOLENOID VALVE
SOL6	WATER SHUTOFF SOLENOID VALVE (OPTIONAL)
T1	WET DISCHARGE TEMPERATURE
T2	DRY DISCHARGE TEMPERATURE
HTR1	SUMP HEATER
HTR3	TRAP HEATER (JZL ONLY)

3.14 Piping & instrumentation, water-cooled, VSD spiral valve

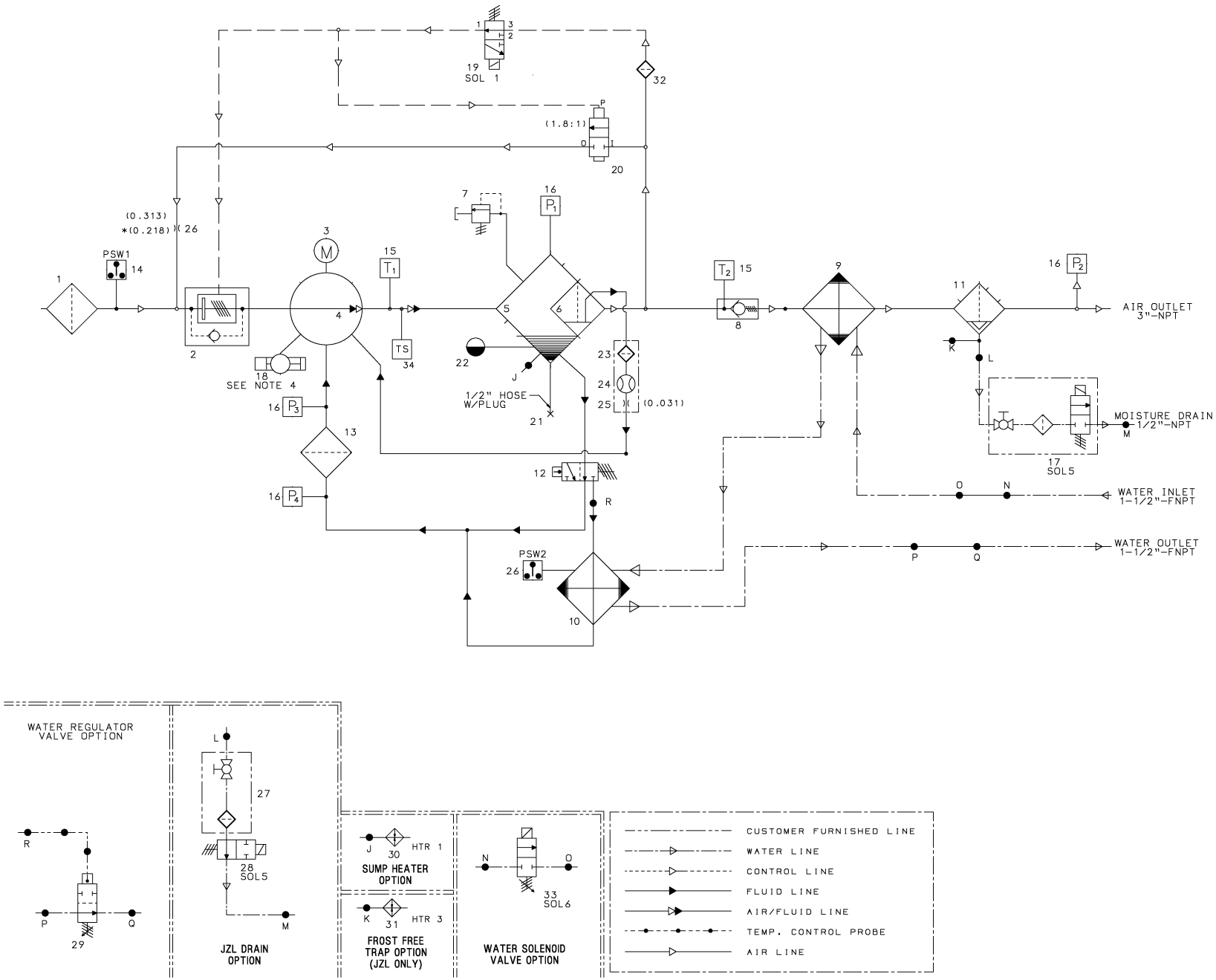

02250228-777 R03

3.14 Piping & instrumentation, water-cooled, VSD spiral valve

Key	Description	Qty
01	FILTER, AIR INLET	1
02	VALVE, AIR INLET	1
03	MOTOR	1
04	COMPRESSOR	1
05	TANK, OIL SEP	1
06	ELEMENT, AIR/OIL SEP	1
07	VALVE, RELIEF	1
08	VALVE,MINIMUM PRESSURE	1
09	COOLER, AIR	1
10	COOLER,OIL	1
11	SEPARATOR, H2O	1
12	ELEMENT, THERMAL VLV	1
13	FILTER, COMPR OIL	1
14	SWITCH, VAC	1
15	PROBE, THERMISTER	2
16	TRANSDUCER, PRESSURE	4
17	VALVE, DRAIN	1
18	VALVE, SPRIAL	1
19	VALVE,SOLENOID 3WNO	1
20	VALVE, BLOWDOWN	1
21	DRAIN, SEP TANK	1
22	PLUG, SIGHTGLASS	1
23	FILTER, SCAVENGE	1
24	SIGHTGLASS, SCAVENGE	1
25	ORIFICE	2
26	SWITCH, PRESSURE	1
27	VALVE, BALL/STNR COMBO	1
28	DRAIN, ZERO LOSS	1
29	VALVE, WATER REG	1
30	HEATER, SEP TNK	1
31	HEATER, ZL	1
32	STRAINER	1
33	VALVE,SOLENOID WATER	1
34	TEMPERATURE SWITCH (CE MACHINES ONLY)	1

Drawing notes

1	SECTION BETWEEN LETTERED POINTS ARE TO BE REPLACED WITH CORRESPONDING OPTION PICTURED BELOW, AS REQUIRED BY FACE OF ORDER.
2	OPTIONAL HEAT TRACE IS APPLIED ONLY TO CONTROL AND MOISTURE DRAIN LINES AND USED ONLY WITH STAINLESS STEEL TUBING.
3	PART VARIES BY MODEL.
4	VCC MODELS ONLY.

Components

Component	Description
P1	WET SUMP PRESSURE
P2	LINE PRESSURE
P3	INJECTION FLUID PRESSURE
P4	HIGH PRESSURE SIDE OF FLUID FILTER
PSW1	INLET FILTER VACUUM SWITCH
PSW2	WATER PRESSURE SWITCH
SOL1	LOAD/UNLOAD SOLENOID VALVE
SOL5	COMBO DRAIN/JZL DRAIN SOLENOID VALVE
SOL6	WATER SHUTOFF SOLENOID VALVE (OPTIONAL)
T1	WET DISCHARGE TEMPERATURE
T2	DRY DISCHARGE TEMPERATURE
HTR1	SUMP HEATER
HTR3	TRAP HEATER (JZL ONLY)

3.15 Wiring diagram, wye-delta spiral valve

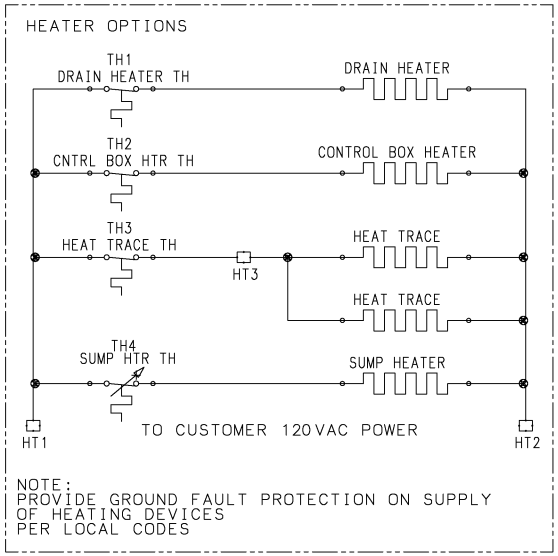

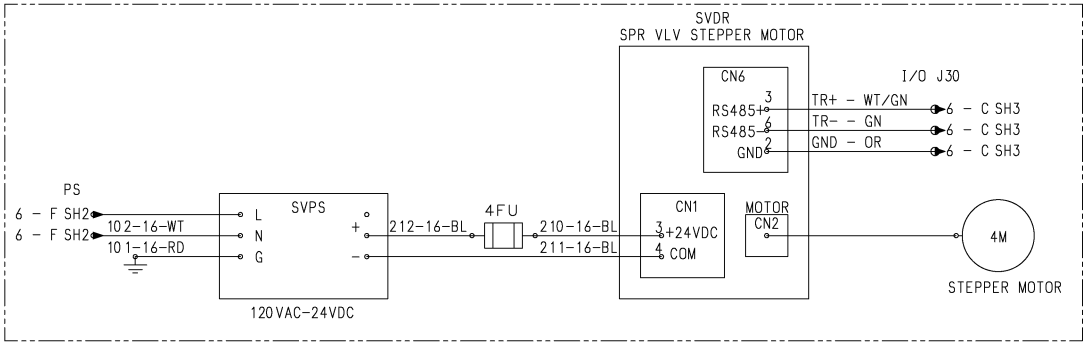

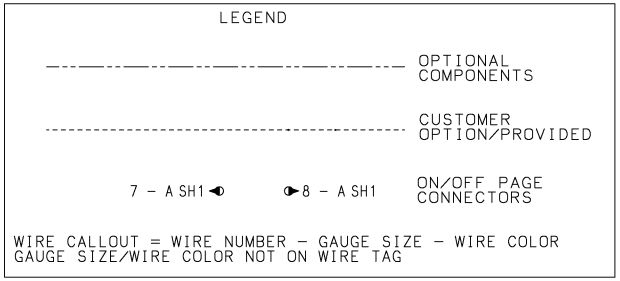

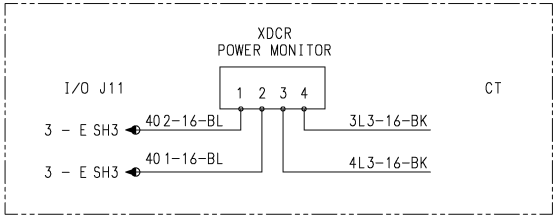

1003-0763 R01 (sh1)

Subject to EAR, ECCN EAR99 and related export control restrictions.

3.15 Wiring diagram, wye-delta spiral valve

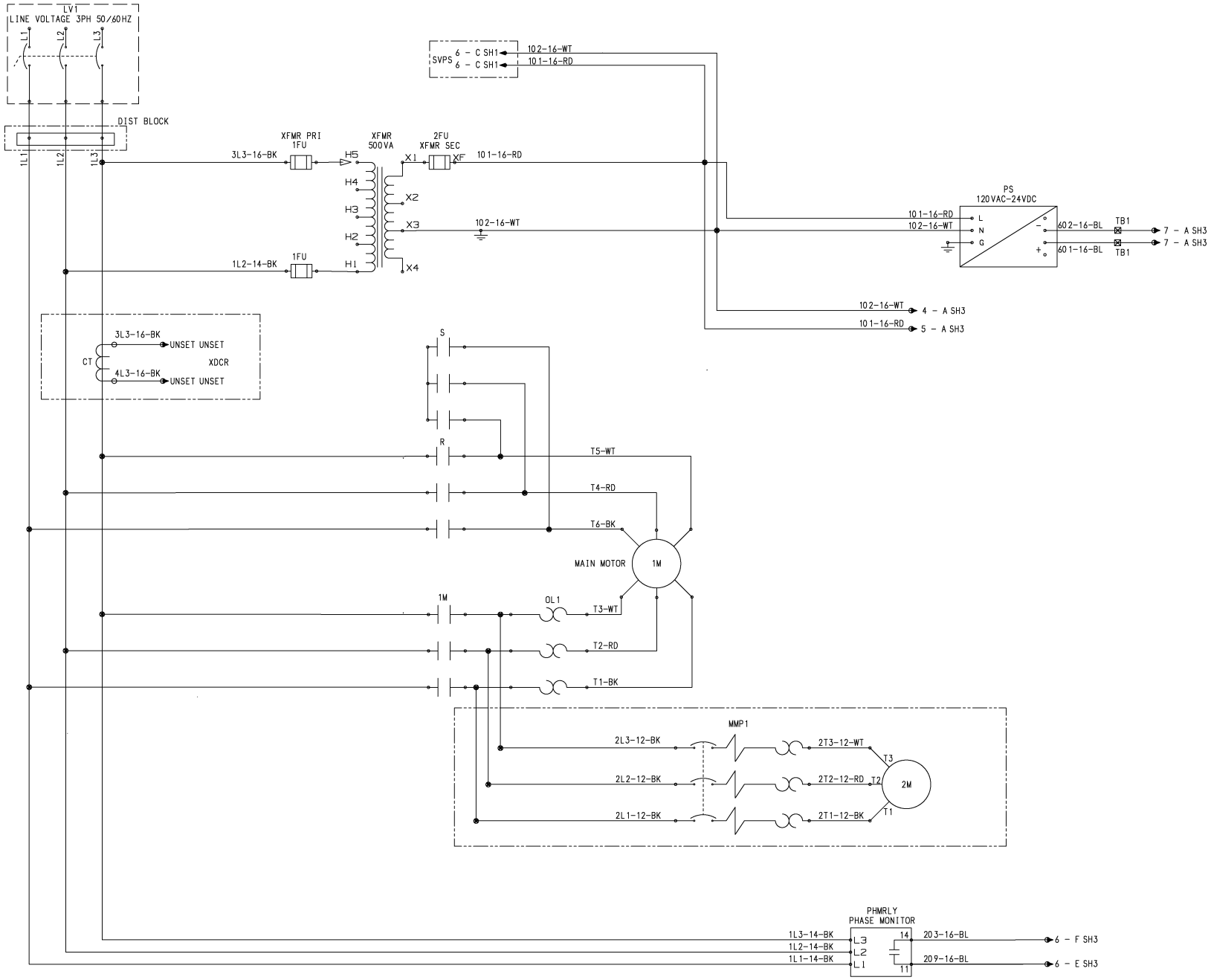

1003-0763 R01 (sh2)

3.15 Wiring diagram, wye-delta spiral valve

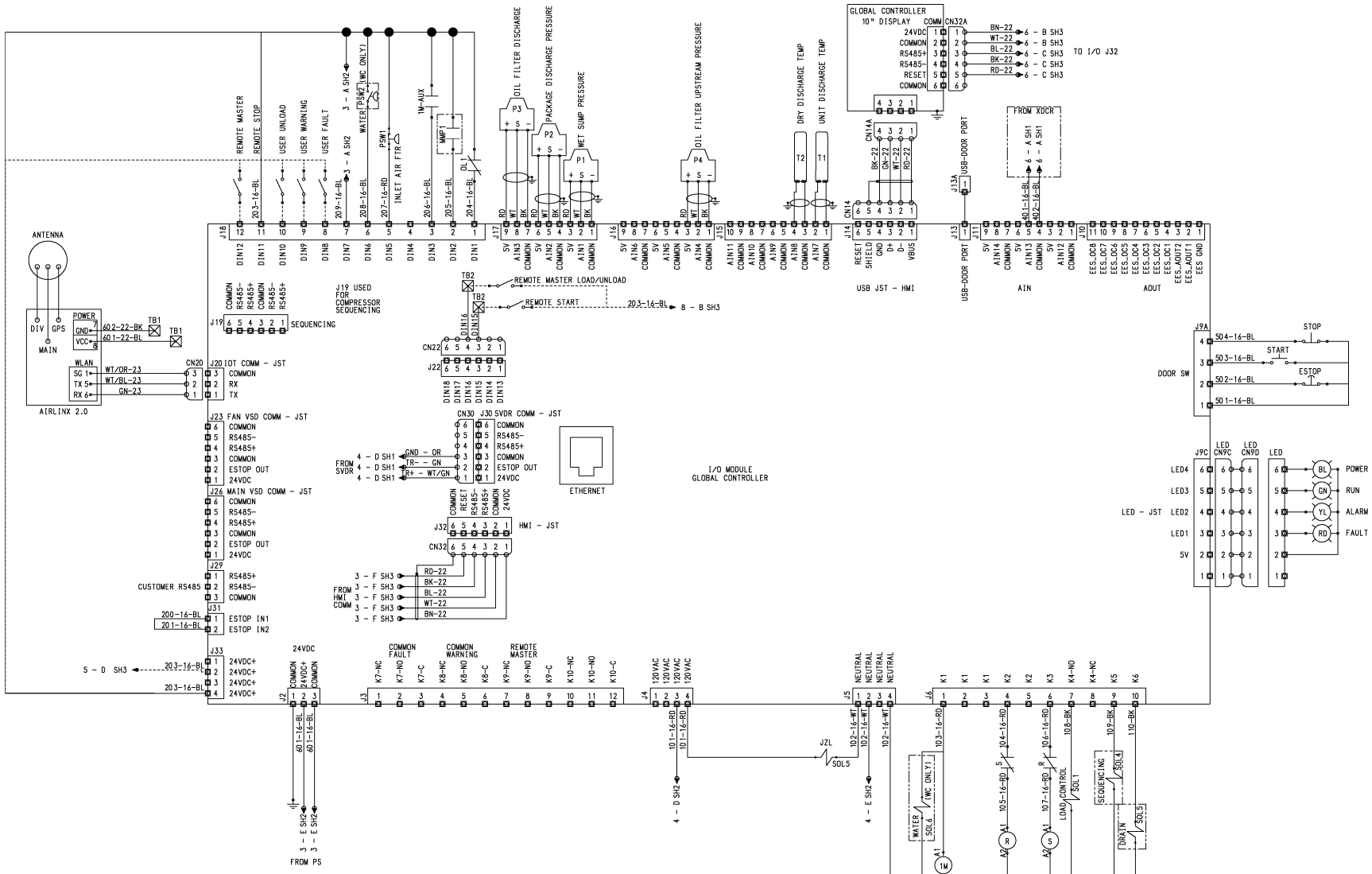

Notes:

3.16 Wiring diagram, VSD

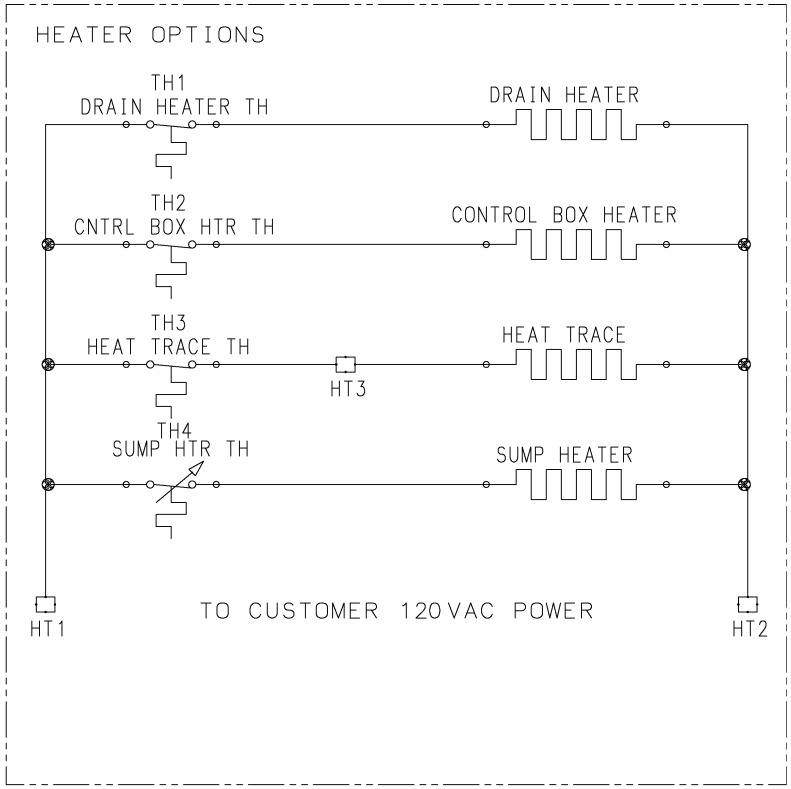

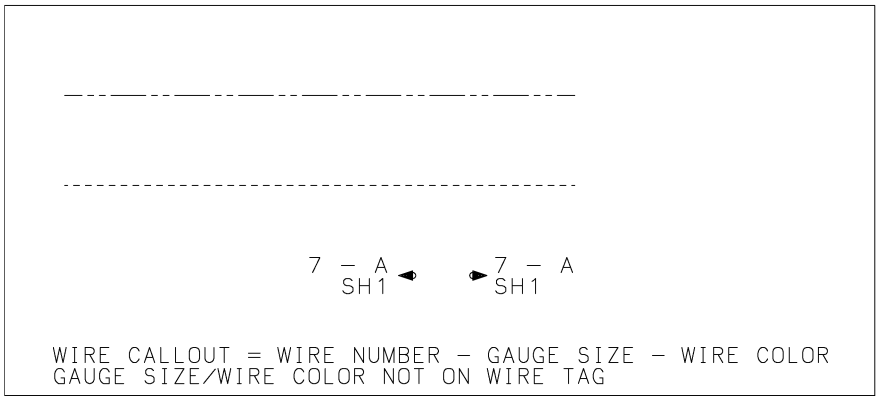

1003-9614 R02 (sh1)

Subject to EAR, ECCN EAR99 and related export control restrictions.

3.16 Wiring diagram, VSD

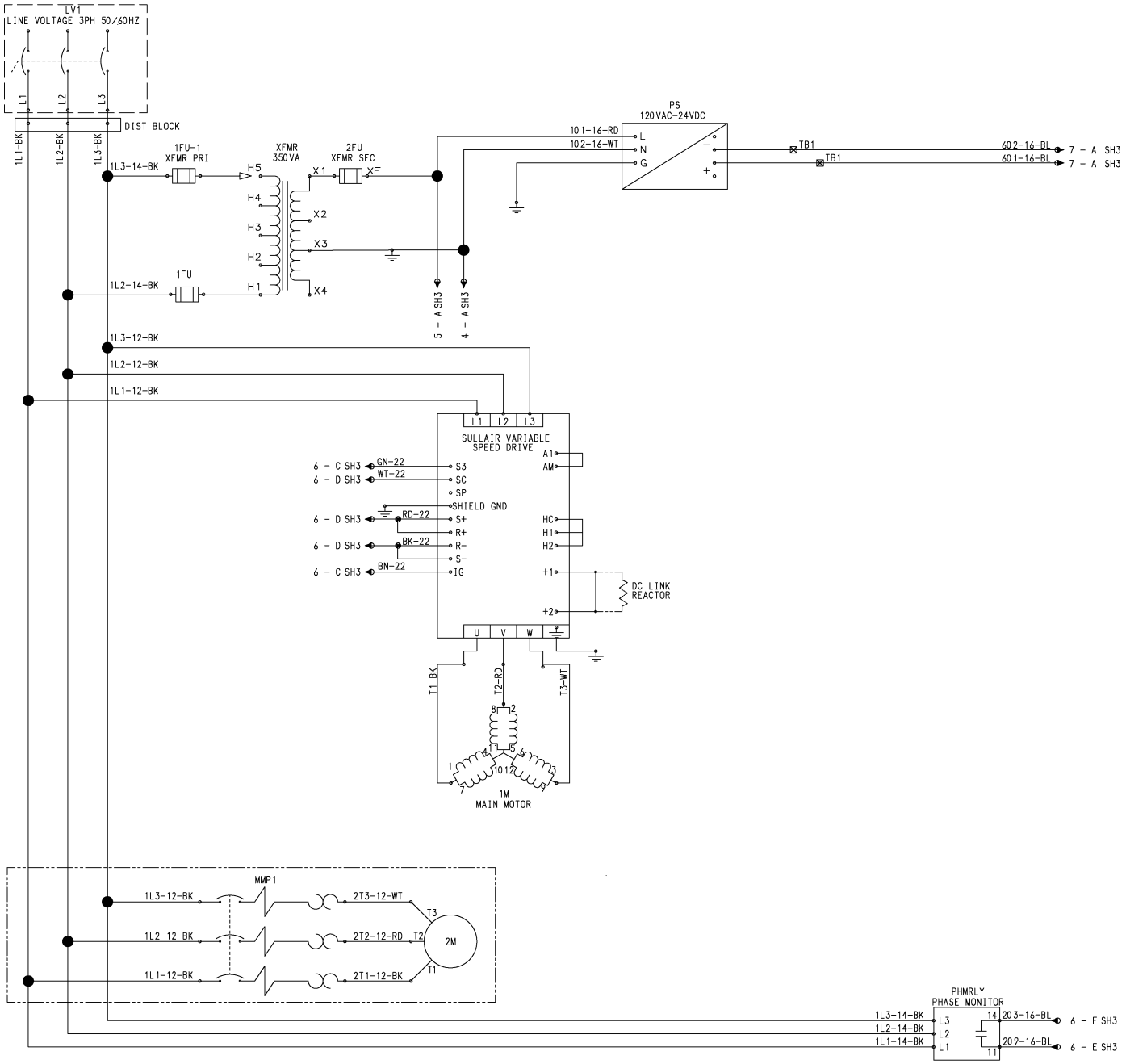

02250231-030 R13
Subject to EAR, ECCN EAR99 and related export control restrictions.

3.16 Wiring diagram, VSD

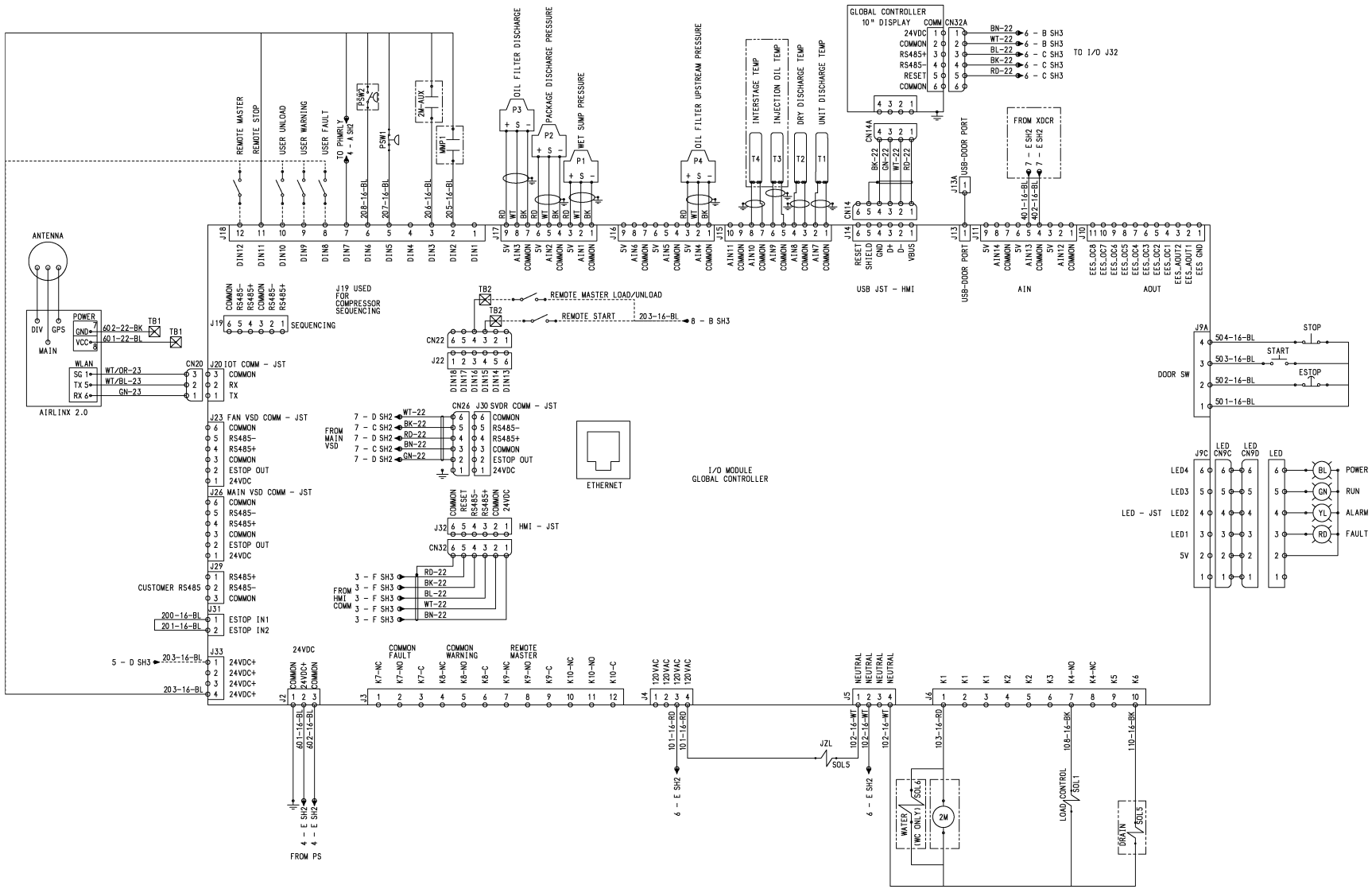

Section 4
Installation

4.1 Mounting of compressor

A suitable foundation or fabricated support must be established to support the compressor. It should be rigid enough to keep the compressor frame level and maintain alignment of the compressor and motor. Tie-down bolts of sufficient size must be used to provide uniform contact between the foundation and the compressor frame. Materials such as rubber can be used to provide uniform contact between the foundation and compressor frame.

Piping loads must be eliminated through the use of flex connectors or other systems which prevent piping loads from being transmitted to the compressor.

Special consideration should be made to meet national and local electrical codes for the required space around and in front of the electrical panel. Lighting should be provided for future service requirements.

Accessibility for fork lift trucks, overhead cranes and maintenance vehicles should be given careful consideration in order to provide any maintenance that may be required. Adequate space around the unit should be provided for access to all components of the compressor.

Softer surfaces in walls or ceilings will absorb sound and minimize ambient noise levels. Harder, reflective surfaces will increase ambient noise levels.

Water-cooled compressors must have provisions for cooling water supply and drainage available.

NOTE

Ambient temperatures above 104°F (40°C) require that the high ambient option is specified for the compressor.

4.2 Ventilation & cooling

4.2.1 Air-cooled compressors

An area with adequate space must be provided for the compressor and its components. Air-cooled compressors require a minimum of 4 feet (1.25 meters) around the perimeter of the compressor.

The location should be free from standing water and allow access to clean air that is free from exhaust and paint fumes, dust, metal filings or caustic chemicals.

Cooling air should be removed from the area in order to prevent the re-introduction of heated exhaust air back into the compressor's cooling system.

Reduced headroom above the compressor will require that cooling air be either ducted or in some way deflected away from the compressor. Inadequate ventilation will result in higher ambient operating temperatures.

NOTE

Systems that employ both a conventional reciprocating compressor and a screw-type axial compressor must be isolated from each other by use of a common receiver tank. Individual airlines from each compressor should be piped to the common receiver tank.

4.2.2 Water-cooled compressors

Adequate cooling water flow must be supplied to water-cooled compressors. Water delivery must be verified to assure constant delivery of the volumes outlined in *Table 4-1: Water flow requirements*. The cleaning of piping and water coolers is the customer's responsibility. Inspect all piping for deposits and clean as necessary. Refer to *Section 4.2.5: Water quality recommendations* on page 54. The figures shown are for full-load operation utilizing an aftercooler. Cooler water will reduce water-flow requirements and warmer water will increase water-flow requirements.

Water piping to and from the compressor unit must be sized to match compressor connection size. Isolation valves with side drains should be installed on both input and return lines. Input water should have a 2 mm strainer installed in-line.

Water quality is critical to proper cooling of the compressor. Excessive build-up of lime, scale or other deposits

Table 4-1: Water flow requirements

Nominal main motor power	Water temperature and required water flow[1]			
	70°F (21°C)		80°F (27°C)	
	gal/min	L/min	gal/min	L/min
125 hp (90 kW)	16	68	25	95
150 hp (110 kW)	22	83	30	114

[1] Water pressure should be maintained between 25 and 75 psig (1.7 and 5.2 bar), but not to exceed 145 psig (10 bar).

can restrict the flow of water to the compressor. These deposits act as a thermal insulator and reduce the efficiency of the water cooler.

The cleaning of piping and water coolers is the customer's responsibility. Inspect all piping for deposits and clean as necessary. Refer to *Section 4.2.5: Water quality recommendations* on page 54.

Table 4-2: Ventilation requirements indicates the minimum ventilation requirements necessary to keep the compressor running at its normal operating temperature. The fan air requirement is the amount of air, which must flow through the compressor for proper ventilation. The heat rejection requirement is the amount of heat that is radiated by the compressor. This heat must be removed to assure a normal operating temperature. With air-cooled compressors it is possible to use this heat for space heating, providing additional pressure drop across the fan does not exceed 0.2 in H_2O. Consult a Sullair office for assistance in utilizing this heat. If ductwork is added, the high static fan option is required.

Do not install a water-cooled or an air-cooled/aftercooled compressor where it will be exposed to temperatures less than 32°F (0°C). Consult factory for machine operation in ambient temperature less than 32°F (0°C).

If machine is equipped with water regulating valve, use the water regulating valve to adjust compressor temperature to maintain a minimum of 185°F (85°C) [210°F (99°C) for pressures rated above 150 psig].

Temperature and pressure gauges should be installed in the water piping for use in troubleshooting of the water system. Water pressure should ideally be between 25 and 75 psig (1.7 and 5.2 bar) but must not be above 145 psi (10 bar).

4.2.3 Water system venting

Vent the system upon installation or after draining the system on start-up:

1. Open the water valve(s) allowing water to flow to the system.
2. Open the vent cocks (located on top of the aftercooler and the lubricant cooler) and allow all air to escape from the system. When water is observed at the vent cocks, close them.

The system is now vented.

4.2.4 Draining the water system

If the system needs to drained completely, follow the steps outlined below:

1. At the rear of the unit. Disconnect both the inlets and discharge water lines.
2. Remove the drain plugs located at the bottom of the aftercooler and lubricant cooler.
3. Allow the system to drain completely.

4.2.5 Water quality recommendations

Water quality considerations are crucial to the effective operation of a water-cooled compressor and yet are the most often ignored. Premature failure of components can often be traced to a reduction in heat-transfer rate that has resulted from a reduced flow rate due to scale build-up in water-cooling lines or the coolers themselves.

Table 4-2: Ventilation requirements

Cooling type	Nominal main motor power	Fan air		Ventilating air—heat rejection		Cooling water—heat rejection	
		cfm	m^3/h	BTU/h	kcal/h	BTU/h	kcal/h
Air-cooled with aftercooler	125 hp (90 kW)	11,800	20,048	375,300	94,574	—	—
	150 hp (110 kW)	11,800	20,048	450,360	113,489	—	—
Water-cooled	125 hp (90 kW)	2,845	4,834	80,400	20,260	375,300	94,574
	150 hp (110 kW)	2,845	4,834	80,400	20,260	450,360	113,489

To ensure maximum life expectancy and best performance of the compressor cooling system, refer to *Table 4-3: Water tests*.

4.2.5.1 Scale

Scale is formed from calcium carbonate, which precipitates out of water. Calcium content tends to be higher in water taken from wells than water taken from the surface of lakes. A higher pH value will also assist in the formation of lime scale. In all cases calcium will form scale when water that has dissolved calcium is heated. It then forms lime-scale on surfaces such as the inside of pipes and the tubing that comprises water coolers. Scale formation on the inside of pipes and inside of heat exchangers acts as a thermal insulator. This causes coolers to be less effective, and piping to have reduced water flow, making them less effective. Over time lime scale build-up can reduce water flow by 80% or greater. This renders the cooling system ineffective and will damage the system. Scale can be controlled with water treatment.

4.2.5.2 Corrosion

As contrasted to lime scale build-up, corrosion eventually causes a reduction in the wall thickness of pipes. High levels of dissolved oxygen and low pH levels assist in the creation of corrosive scale. A thin coating of lime scale is often beneficial in helping to prevent corrosion from forming.

4.2.5.3 Biological and organic fouling (slime)

The heightened temperatures of compressor cooling operations help to reduce the likelihood that organic fouling will become a major concern. In the event of an infestation, commercial chemical shock treatments are available to control any outbreaks.

4.2.6 Seawater-cooled units

NOTE

If seawater is to be used for cooling, optional copper-nickel coolers must be selected.

Water cleanliness is critical for operation of the compressor. A strainer must be installed in the inlet piping of the water system. It is also recommended that a solenoid valve (normally closed) be installed into the water outlet side of the compressor system. In addition, be aware that cleaning of coolers as a result of fouling is a customer responsibility.

Isolation valves with side drains should be installed on both the inlet and outlet lines.

The recommended flow rate cannot be exceeded. An orifice plate must be installed in the pipe-work at least 3.3 ft (1 m) before the cooler. The orifice size must be calculated to ensure that the maximum seawater flow rate cannot be exceeded. Without these precautions, the seawater flow rate through the cooler may be several times the recommended maximum, which will lead to rapid system failure.

Table 4-3: Water tests

Substances	Test interval	Acceptable concentration
Corrosivity hardness, pH, total dissolved solids, temperature at inlet, alkalinity	Monthly. If stable for 3 to 4 months, analyze quarterly.	Langerlier index 0 to 1
Iron	Monthly	< 2 ppm
Sulphate	Monthly	< 50 ppm
Chloride	Monthly	< 50 ppm
Nitrate	Monthly	< 2 ppm
Silica	Monthly	< 100 ppm
Desolated oxygen	Daily. If stable, analyze weekly.	0 ppm (as low as possible)
Oil & grease	Monthly	< 5 ppm
Ammonia	Monthly	< 1 ppm

Seawater pressure	Orifice diameter for maximum seawater flow (or 58 US gal/min [220 L/min])	
	in	mm
25 psi (1.7 bar)	1.15	29
35 psi (2.4 bar)	1.06	27
45 psi (3.1 bar)	1.00	25
55 psi (3.8 bar)	.94	24
65 psi (4.5 bar)	.90	23
75 psi (5.2 bar)	.87	22

No oil cooler manufacturer can guarantee that its products will have an indefinite life and for this reason, we suggest that the cooling system be designed to minimize any damage caused by oil cooler leaking. This can be achieved as follows:

- The oil pressure should be maintained at a pressure higher than the seawater pressure. In the event of a leak occurring, the oil will be prevented from becoming contaminated.
- When the hydraulic system is not in use, the coolers should be isolated from incoming seawater under pressure.
- The seawater outlet pipe from the cooler should have an open run to waste piping.

4.3 Outdoor installation (sheltered)

Compressor packages installed in locations where they will be exposed to outside elements must be equipped with a TEFC motor. Standard compressors have water tight controls that are NEMA 4 rated and are suitable for this type of installation.

NOTE

Variable speed drive compressors are NEMA 12 rated and must not be installed outside or exposed to the elements.

The compressor should be on a concrete pad, which is designed to drain water away from it. If the concrete pad is sloped, then the compressor must be mounted so that it is level. The base or skid must be fully supported where it contacts the concrete pad.

A weatherhood option should be selected to prevent direct rain and snow from falling on the unit. If local weather conditions can be extreme such that direct rain or snow may fall on the unit, it should be in a fully enclosed room or building.

If installed under a shelter, air-cooled machines must be positioned in a way that prevents air recirculation (i.e., hot exhaust being allowed back to the system air inlet).

In installations that include more than one compressor, hot air exhaust should not be directed toward the fresh air intake of the second unit or an air dryer.

A standard machine installed outside must not be started or run if the ambient temperature in and around the compressor drops or may drop below 40°F (4.4°C).

For installation in a below freezing climate, a low ambient option with heat tracing and a separator/sump tank heater must be installed.

4.4 Service air piping

Review carefully the total air system before installing a new compressor. Items to consider for the total air system include liquid carryover, pipe sizing, and the use of an auxiliary receiver tank. The installation of a drip leg or multiple drip legs, installation of a line filter(s) and the installation of isolation valve or valves. These considerations are important to ensure a safe and effective system. See *Figure 4-1*.

NOTE

Discharged air contains a very small amount of compressor lubricating oil, and care should be taken to ensure that this oil would not interfere with downstream equipment. Downstream filters and an air dryer can remove any carryover.

WARNING

The use of plastic bowls on line filters and other plastic airline components without metal guards can be hazardous. Synthetic coolants or the additives used in mineral oils can alter their structural integrity and create hazardous conditions. Metal bowls should be used on any pressurized system for safety concerns.

"The Plastic Pipe Institute recommends against the use of thermoplastic pipe to transport compressed air or other compressed gases in exposed above ground locations, e.g. in exposed plant piping."[1]

Sullube® should not be used with PVC piping systems. It may affect the bond at cemented joints. Certain other plastic materials may also be affected.

[1]*Plastic Pipe Institute, Recommendation B. Adopted January 19, 1972.*

4.4.1 Pipe sizing

Pipe should be sized at least as large as the discharge connection of the compressor. Piping and fittings should all be suitably rated for the discharge pressure.

4.4.2 Use of auxiliary receiver tank

An auxiliary receiver tank should be used in cases where large demand swings are expected. Isolation Valve(s) If isolation of the compressor from the service lines is required, isolation valves should be installed close to the discharge of the compressor. They should be installed with drip legs that drain sloping downward from the base in order to drain properly. Install a vent to the piping downstream of the compressor outlet connection.

When two compressors are operated in parallel, provide an isolation valve and a drain trap for each compressor before the common receiver.

A built-in aftercooler reduces the discharge air temperature below the dew point. For most ambient conditions, considerable water vapor is condensed. To remove the condensation, each compressor with built-in aftercooler is supplied with a combination condensate separator/

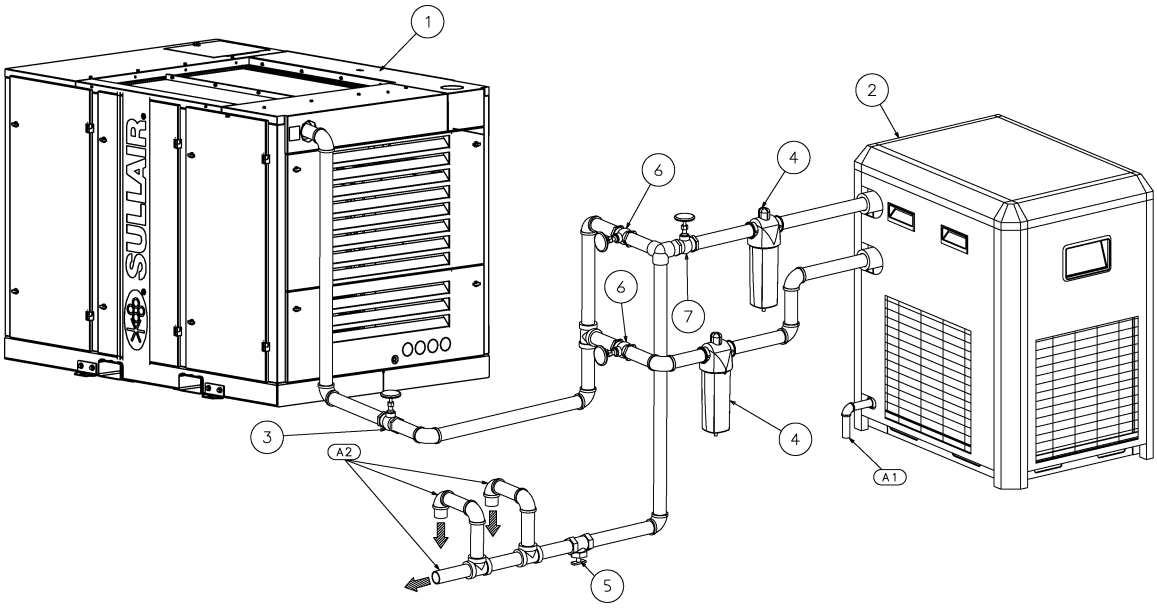

1. Sullair compressor	4. Sullair filter	7. Standard gate valve
2. Sullair dryer	5. Water leg drain valve	A1. Customer connections
3. Shut-off gate valve	6. By-pass gate valve	A2. Customer connections

Figure 4-1: Service air piping—typical installation

trap. A drain line should be installed on the condensate drain.

NOTE

For low-volume systems that do not require an auxiliary separator/sump, compressor response time may need to be adjusted. Consult the Sullair Service Department for assistance.

4.5 Coupling alignment check

No coupling alignment is required.

4.6 Fluid level check

The air compressor is shipped with the proper amount of fluid installed. However, it is necessary to check the fluid level at the time of installation and during continued operation of the compressor. The fluid level is to be checked when the compressor is in the **SHUT DOWN** mode (fluid level may not be visible when operating), and by looking at the sight glass on the separator/sump tank. To be able to see the fluid level it may be necessary to start the machine and build the separator/sump tank pressure up to 10/20 psi and then shut down. Wait a few minutes to check oil level. If no fluid level is seen in the sight glass add fluid to the center of the glass. Do not overfill in any case. When a complete fluid change is performed, fill the separator/sump tank to the maximum allowable fluid level, which is center of the sight glass.

4.7 Electrical preparation

Interior electrical wiring is performed at the factory. Required customer wiring should be done by a qualified electrician in compliance with OSHA, National Electric Code and/or any applicable local electrical code concerning isolation switches, fused disconnects, etc. Sullair provides a wiring diagram for use by the installer. An electrical check should be made to help assure that the first start-up will be trouble-free. The compressor and drive should be properly grounded/earthed in accordance with Local and National Code requirements.

Installation of this compressor must be in accordance with recognized electrical codes and any local Health and Safety Codes.

Feeder cables should be sized by the customer/electrical contractor to ensure that the circuit is balanced and not overloaded by other electrical equipment. The length of wiring from a suitable electrical feed point is critical as voltage drops may impair the performance of the compressor.

Feeder cable connections to incoming terminals L1-L2-L3 should be tight and clean.

The applied voltage must be compatible with the motor and compressor data plate ratings.

DANGER

Lethal shock hazard inside. Disconnect all power at source before opening or servicing.

1. Check incoming voltage. Be sure that the incoming voltage is the same voltage that the compressor was wired for.
2. Check motor starter and overload heater sizes.
3. Check all electrical connections for tightness.

4.8 Motor rotation direction check

These model compressors come standard with phase sequence monitoring. Phase monitors can fail or be wired improperly. Motor rotation must be verified.

The air end must not be bumped in reverse rotation. To prevent this the coupling element must be removed to check rotation of the main motor.

Fan motor rotation should be checked. It should rotate counter-clockwise when viewing the fan motor from the backside of the motor

.

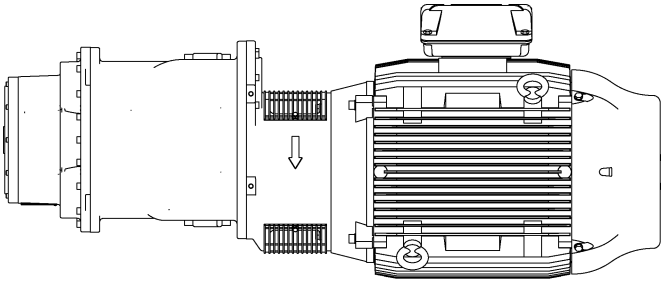

Figure 4-2: Direct drive rotation

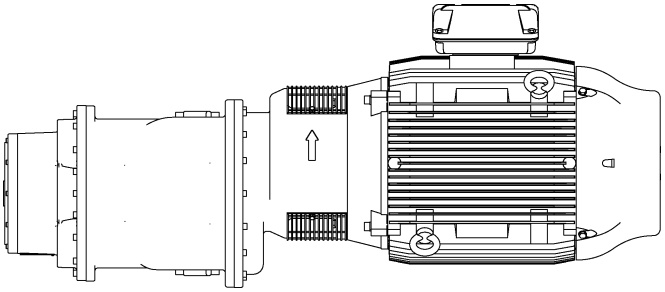

Figure 4-3: Gear drive rotation

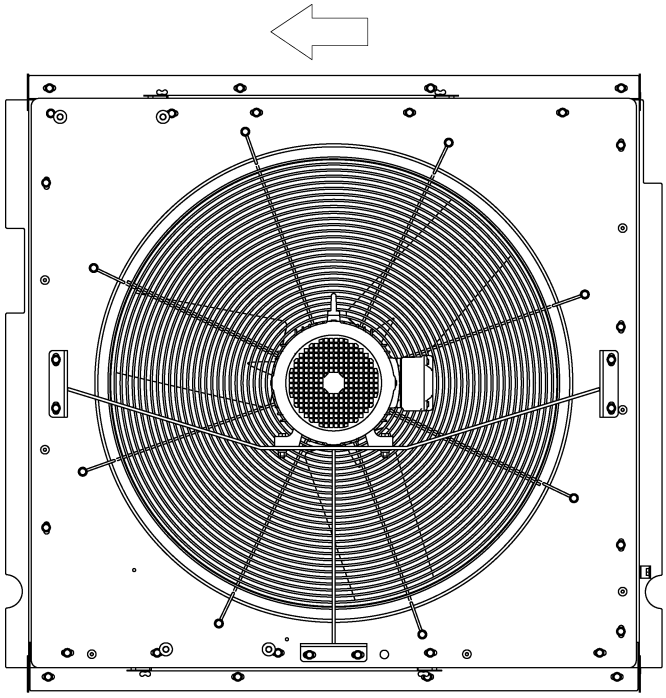

Figure 4-4: Fan rotation

Notes:

Section 5
Operation

5.1 Introduction

While Sullair has built into the LS Series package a comprehensive array of controls and indicators to assure its proper operation, the user should recognize and interpret readings which call for service or indicate the onset of a malfunction. Before starting the unit, the user should become familiar with the controls and indicators—their purpose, location, and use.

5.2 Purpose of controls

Indicators and functions included in the LS compressor package, except for the controller, are listed in the following guide. For more information on the controller, see *Section 5: Controller*.

Table 5-1: Controls and purposes

Control	Purpose
Emergency stop button (E-stop)	Pushing in this button, found adjacent to the controller, cuts all AC outputs from the controller and de-energizes the starter. A fault message is displayed by the controller until the E-stop button is pulled out and the Stop button is pressed.
Thermal O/L reset	Momentarily pushing this button, found on the starter's thermal overload element housing, re-closes the starter's contacts after a current overload takes place. Please be aware that the elements must be allowed to cool sufficiently before resetting.
Inlet valve	The inlet valve throttles the air flow to the compressor inlet, in order to match air supply to the demand.
Spiral Valve (optional)	Internally bypasses and controls the air flow capacity of the compressor, in order to match air supply to the demand.
Pressure regulator (inlet valve)	Opens a pressure line between the sump and inlet valve piston allowing the inlet valve to regulate air delivery according to the air demand.
Solenoid valve #1	Electrically actuated, 3-way valve which controls the flow of pneumatic logic signals. Used throughout package to open the blowdown valve and close the inlet valve.
Solenoid valve #2	Electrically actuated 3-way valve, normally open to the control regulators. Closes to force the machine to full load operation as lead machine for sequencing.
Minimum pressure valve	Maintains 50 psig (3.4 bar) in the receiver tank when the compressor is running loaded. Also incorporates a check valve, which prevents compressed air back-flow from the system when unloaded or shutdown.
Pressure relief valve	Vents the sump vessel to atmosphere before the compressed air pressure exceeds rated tank pressure. Its operation indicates fault with the controller operation unload pressure set too high or failure of solenoid valve #1.
Blowdown valve assembly	Vents the sump vessel to atmosphere during unloading and shutdown.
Thermal mixing valve	Bypasses fluid flow around the cooler until the fluid reaches a temperature of 185°F (85°C) [210°F (99°C) for ≥ 150 psi (10.3 bar)]. Useful for fast warm-up during start. Maintains a minimum temperature during periods of low load or low ambient temperatures.
Sump sight glass	Indicates level of lubricant in the sump. Located on the sump side, fluid level should be maintained at center of the sight glass with machine shut down.

Table 5-1: Controls and purposes

Control	Purpose
Separator return line sight glasses	Indicate fluid flow in the separator return lines. Flow should be visible during full load operation; little to no flow during unloaded operation. Sluggish flow during full load operation indicates the need to clean the strainers fitted to the return lines.
Water pressure switch	De-energizes the starter, via the controller, if the water pressure falls below 10 psig (0.7 bar). This switch is not adjustable. Used on water-cooled packages only.
Drain valves	Lubricant sump drain valve.

5.3 Initial start-up procedure

The following procedure should be used to make the initial start-up of the compressor.

NOTE

Before initial start up check that fluid is at proper level in the sight glass. Grease motor per manufacturer's recommendations.

1. Read the preceding pages of this manual thoroughly.
2. Check for correct rotation of fan motor (refer to *Section 4.8* on page 58).
3. Be sure that all preparations and checks described in *Section 4: Installation* have been made.
4. Press the Start button.
5. Open the shut-off valve to the service line.
6. Check for possible leaks in piping.
7. Slowly close the shut-off valve to assure proper nameplate pressure unload setting is correct. The compressor will unload at nameplate pressure. If adjustments are necessary, see *Section 7.10: Pressure regulator adjustment* on page 73.
8. Observe the operating temperature. Refer to *Section 2.4* on page 17 for proper operating temperature range. If temperature exceeds this range, the cooling system and installation environment should be checked.
9. Open shut-off valve to the service line.
10. Reinspect the compressor for temperature and leaks the following day.

5.4 Subsequent start-up procedure

The following procedure should be used to make subsequent start-ups of the compressor.

1. Check that the proper level is visible in the fluid sight glass.
2. Press the Start button.
3. While the compressor is running, observe the instrument panel and maintenance indicators.

5.5 Shutdown procedure

The following procedure should be used to shut down the compressor.

1. Press the Stop button.

WARNING

The E-Stop (emergency stop switch) should be used only in the event of an emergency. Refrain from using the E-Stop to shut the machine down during normal operations or equipment damage can occur. All usage of the E-Stop is logged in permanent memory for use by service technicians when troubleshooting a machine. Non-emergency use of E-Stop is considered equipment abuse and could void the manufacturer's warranty.

Section 6
Controller

6.1 Controller layout

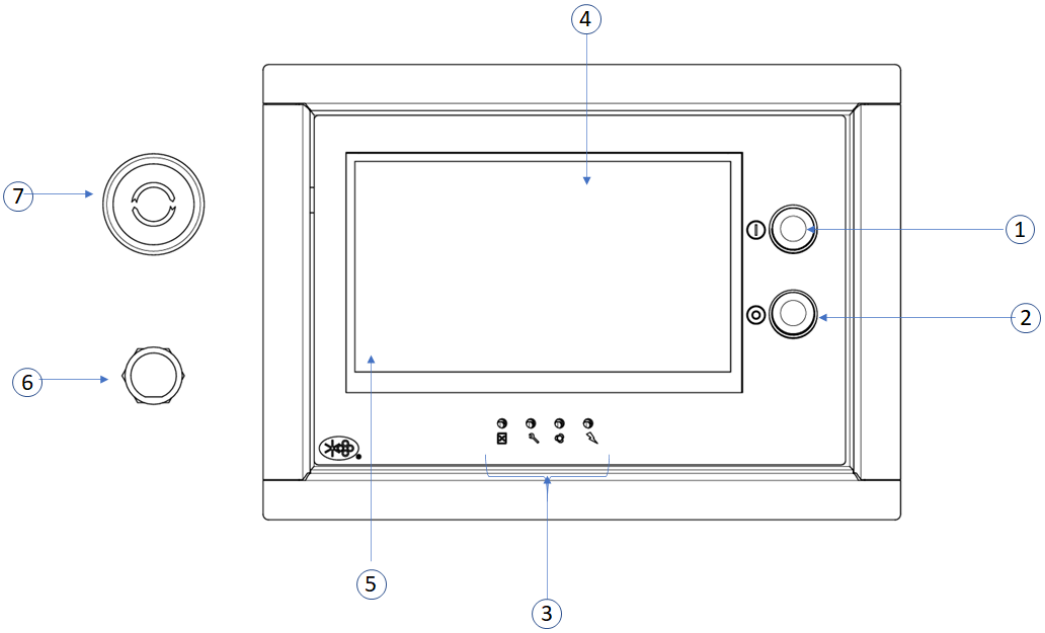

1.	**Start button**	5.	**Menu button**
2.	**Stop button**	6.	**USB Port**
3.	**Indicator LEDs**	7.	**E-stop button**
4.	**Touch screen display**		

Figure 6-1: STS Controller

Key	Description	Function
1	**Start button**	Push to start the compressor. Can also be used to reset maintenance and warning messages while the compressor is running.

2	**Stop button**	Push to stop the compressor. Can also be used to clear fault messages when the compressor is stopped. Oil free compressors will enter an Unload Stop state upon the first press of the Stop Button. The machine will run unloaded for 5 minutes to clear the compressor of condensate. This timer should be allowed to expire but if it is required to stop the machine prior to completion of the unload stop time, press the Stop button a second time.
3	**Indicator LEDs**	There are four status indicators that identify the current operational status of the machine: • Power-On Indicator (Blue) – Lights when power is applied to the controller. It will blink slowly to indicate that Automatic Restart After Power Failure is enabled. • Automatic or Manual Run Mode Indicator (Green) – Lights whenever the compressor is set to start and run automatically. The light is constant whenever the motor is running. The light will blink slowly if the compressor motor is stopped while in Automatic Mode as a warning that the machine may restart at any time. The light may blink rapidly if a machine start is imminent. • Maintenance or Warning Indicator (Amber) - Lights when recommended maintenance or service warning is issued. In most cases, the machine will continue to operate normally. • Fault Indicator (Red) - Lights when a compressor fault has occurred. The light remains steady and the compressor remains inoperative until the fault condition is corrected.
4	**Touch screen display**	Displays operating parameters and compressor information. Provides interface between the user and the compressor controller.
5	**Menu button**	Returns to the main menu screen.
6	**USB Port**	Use this port to upload information to the STS controller using a flash drive.
7	**Emergency Stop (E-stop) button**	Used to stop the compressor immediately. The E-stop button is logged as a fault and should only be used when essential.

6.2 Home page

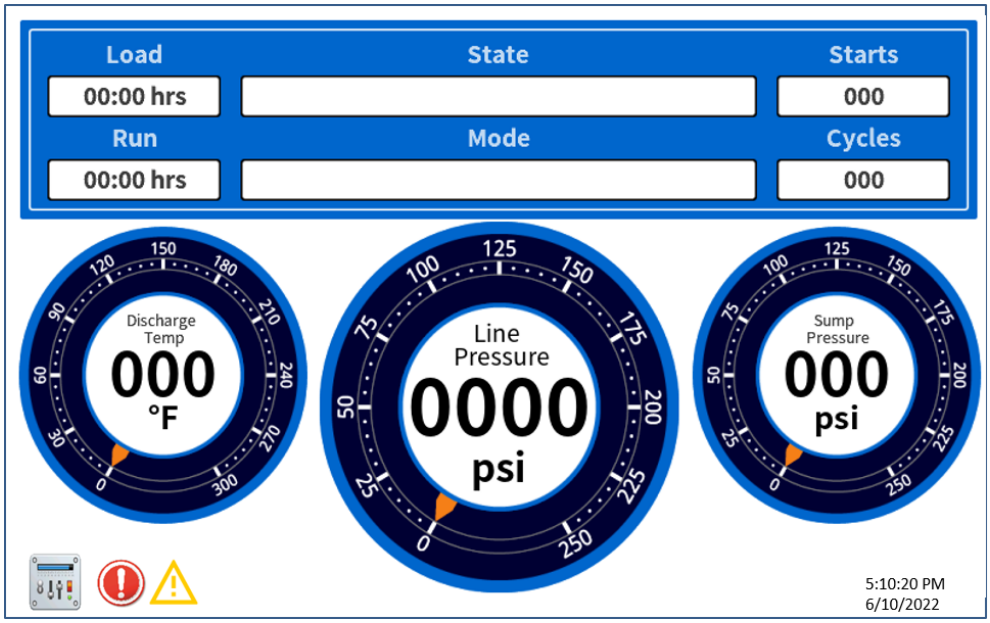

Figure 6-2: Home page—Analog/Digital Panel screen (default)

For a complete overview of the controller, see the ***Sullair Touch Screen Controller 2.0 User Manual*** (P/N 1002-6712 R02) for more information.

NOTE

Consult your local Sullair service representative for installation guidance.

NOTE

Do not use tools or any other instrument to operate touch screen. Use only finger or stylus to operate display while only using moderate force.

The **Analog/Digital Panel** screen is the default screen for the home page. This screen is divided into two main sections:

- The status area at the top shows the load and run times, starts and cycles, and message related to the current status (state and mode).
- The gauge area below shows discharge temperature, discharge pressure, and sump pressure as analog gauges.

You can change the units of measure for pressure and temperature on the **User Preferences** page (see *Section 6.4* on page 67).

You can access the **User Preferences** page by pressing the main menu button in the lower left corner of the screen, then selecting **System Information**, and then selecting **User Preferences**. (See *Section 6.5: Menu hierarchy* on page 68 for the complete menu structure.)

NOTE

- Do not expose machine to temperatures outside of design specifications.
- Do not expose machine or control panel to direct, uninterrupted UV/sunlight.
- Do not install machine in areas with high continuous moisture content.

6.3 Main Menu page

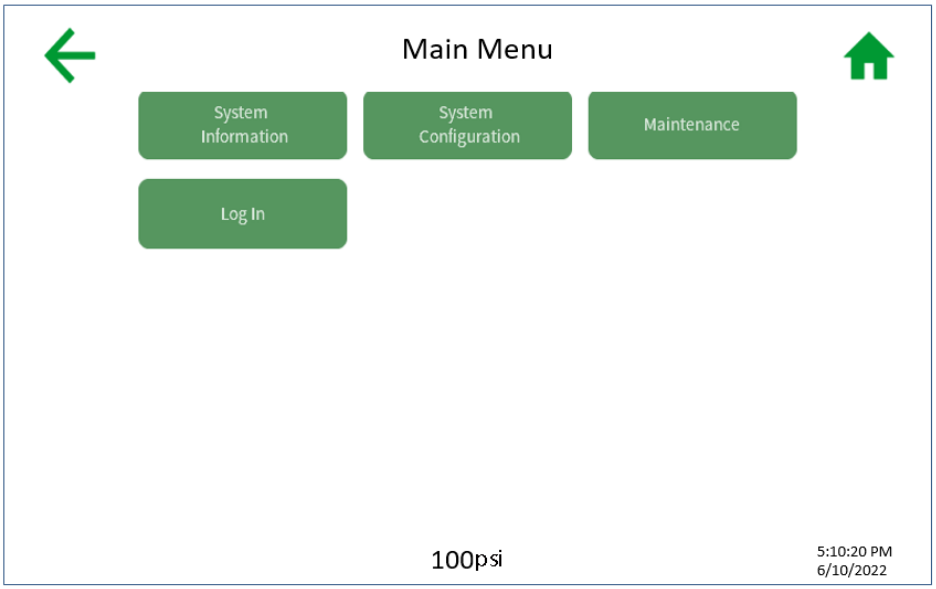

Figure 6-3: Main menu page

From the main menu, you can navigate to other pages that allow you to:

- View and change configuration settings
- View reports, charts, and graphs
- View fault and warning history
- View maintenance information
- Login in as an administrator
- And perform other administrative functions

To view the complete menu hierarchy, see *Section 6.5* on page 68.

You can reach the main menu by pressing the main menu (home) button on the home page, or by pressing the back arrow from other menus until you return to the main menu.

- The back arrow always takes you back one page.
  - If you're on the main menu page, the back arrow will return you to the home page.
- The main menu (home) button always takes you back to the home page.

6.4 User Preferences page

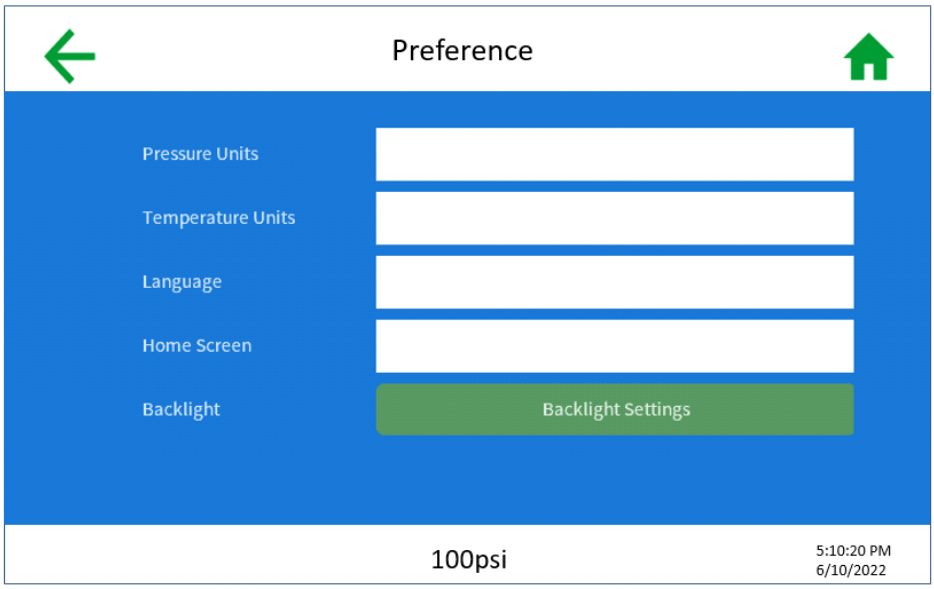

Figure 6-4: User preferences page

The following user interface options are available under **User Preferences**:

- **Pressure Units**. The user can choose between **PSI**, **BAR**, and **k/Pa** as the unit of measure for pressure.
- **Temperature Units**. The user can choose between Fahrenheit (**F**) and Celsius (**C)** as the unit of measure for temperature.
- **Language**. The user can choose between English, Spanish, French, Portuguese, Russian and Chinese for the display language.
  - **Note:** The display language changes immediately upon selection.
- **Home Screen**. The user can choose between **Analog/Digital Panel**, **Mimic Panel**, or **Multi Gauge** for the home page screen. See the ***Sullair Touch Screen Controller 2.0 User Manual*** (P/N 1002-6712 R02) for more information.

You can access the **User Preferences** page by selecting **System Information** from the main menu and then selecting **User Preferences**.

6.5 Menu hierarchy

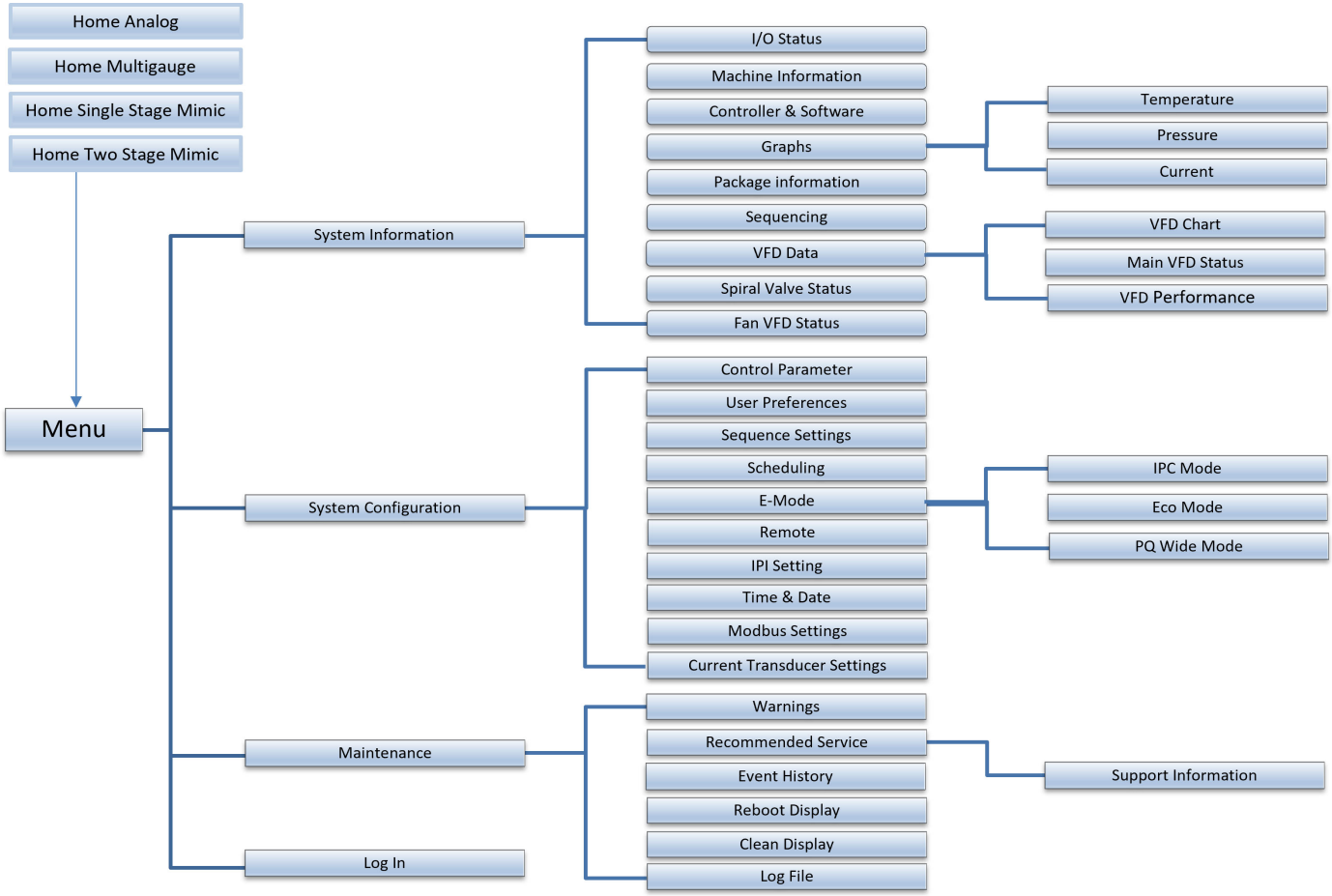

Figure 6-5: Sullair touch screen controller menu hierarchy

6.6 AirLinx 2.0 remote monitoring

Sullair AirLinx 2.0 allows remote monitoring of your compressor. AirLinx 2.0 provides access to all monitored compressor readings—power, pressure, flow and more—24 hours a day, seven days a week, on any device that can load a browser.

To sign up for an AirLinx 2.0 account, please visit sullair.com or e-mail CRC@sullair.com for a digital sign-up form. If you need connection assistance, please call 888-320-8332 or send an e-mail to Support@opc247.com.

6.6.1 Troubleshooting AirLinx 2.0 communications

AirLinx 2.0 consists of an antenna installed on the outside of the compressor's enclosure and an CPTrans modem installed inside the compressor's control cabinet. The LED lights on the modem indicate the current status of the compressor. The definitions of these lights are shown in *Table 6-1*.

Table 6-1: LED Display

LED name	Color	Details
NET	Green	WAN connection status Offline: Off Online: Green light on
LAN1	Green-Red	LAN1 Ethernet1 port status Linkup (100M): Green light on Linkup (10M): Red light on
LAN2	Green-Red	LAN2 Ethernet2 port status Linkup (100M): Green light on Linkup (10M): Red light on
LED1	Green	Power status Power off: off Power on: Green light on
LED2	Green	Communication module status Communication module start up: off Communication module activated: Green light on
LED3	Green	Wireless LAN module status Wireless LAN module start up: off Wireless LAN module activated: Green light on
LED4	Green	LTE signal strength Signal (no connection -weak): off Signal (acceptable - strong): Green light on
LED5	Green	Serial communication status No serial communicaiton (Tx): off During serial communication (Tx): Green light on
LED6	Green	Reserved

Notes:

Section 7
Maintenance

7.1 General

WARNING

Before any repairs are attempted, refer to *Section 1: Safety* before proceeding.

As you proceed in reading this section, it will be easy to see that the Maintenance Program for the air compressor is quite simple. The use of the service indicators provided for the fluid filter, air filter and fluid separator will alert you when service maintenance is required. When the controller display indicates service, maintenance for that specific item is required. See instructions for each item in *Section 7.7: Filter maintenance* on page 72.

WARNING

High-pressure hazard!

- **Do not** remove caps, plugs, and/or other components when compressor is running or pressurized. Stop compressor and relieve all internal pressure before doing so.
- Failure to comply could result in death or serious injury.

7.2 Daily operation

Prior to starting the compressor, it is necessary to check the fluid level in the separator/sump tank. Should the level be low, simply add the necessary amount. If the addition of fluid becomes too frequent, a simple problem has developed which is causing this excessive loss. See *Section 7.16.2: Troubleshooting guide* on page 77 under “Excessive compressor fluid consumption” for a probable cause and remedy.

After a routine start has been made, observe the controller display and be sure it monitors the correct readings for their particular phase of operation. After the compressor has warmed up, it is recommended that a general check on the overall compressor be made to assure that the compressor is running properly.

7.3 Maintenance after initial 50 hours of operation

After the initial 50 hours of operation, a few maintenance requirements are needed to clean the system of any foreign materials. Perform the following maintenance operations to prevent unnecessary problems:

- Clean the return line strainer. Refer to the sump tank assembly section of the Parts Manual for location.
- Clean the return line orifice.
- Change fluid filter.

7.4 Maintenance every 2000 hours

After 2000 hours of normal operation, or at a minimum every six months, it will be necessary to perform the following:

- Clean the return line strainer. Refer to the sump tank assembly section of the Parts Manual for location.
- Replace the fluid filter element.
- Pull oil sample for analysis.
- Check air filter. Change if necessary.
- Motor greasing - refer to the motor greasing interval on the motor nameplate.
- On VSD compressors, check the grounding brush on the motor shaft for wear and clean contact. Replace as necessary. Typically these brushes need to be replaced every 8000 hours or once per year. Use 02250184-819 Grounding Brush Kit for replacement.

7.5 Motor maintenance

Grease main and fan motors according to the motor maintenance intervals on the motor nameplate. Follow the recommended grease type and quantity specified by the motor manufacturer.

7.6 Fluid maintenance

Change the separator element every 8000 hours or 1 year, whichever comes first. Drain the separator/sump tank and change the compressor fluid using instructions shown in *Section 3.4: Lubrication change recommendations and maintenance, fluid* on page 25.

If help is needed in draining the units, purchase one of the following kits:

- 1003-4832, drain 23 series with spiral valve LS90-160
- 1003-4669, drain 23 series without spiral valve LS90-160
- 1003-4833, drain 26 series with spiral valve LS160
- 1003-4835, drain 26 series without spiral valve LS160

7.7 Filter maintenance

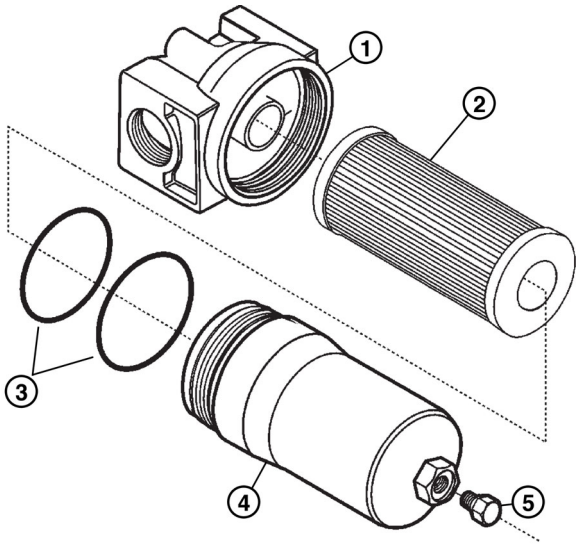

1.	Filter Head
2.	Element[1]
3.	O-ring Seals[1]
4.	Bowl
5.	Drain Plug with O-ring[1]

[1]Fluid filter element replacement P/N: 02250139-995

Figure 7-1: Fluid Filter Assembly

Refer to *Figure 7-1*. Replace your fluid filter element under any of the following conditions, whichever occurs first:

- Every 2000 hours.
- When the panel indicates high differential pressure.
- Every fluid change

7.7.1 Fluid filter element replacement

Refer to *Figure 7-1*.

1. Use a wrench to remove the filter canister.
2. Remove and dispose of the filter element properly. Observe all laws and regulations for filter disposal.
3. Clean gasket seating surface.
4. Apply a light film of fluid to the element seal.
5. Install the element into the filter canister.
6. Thread the canister and element back on the filter head.

7. Restart compressor and check for leaks.

NOTE

Dispose of fluids in accordance with applicable federal, state, and local regulations.

7.8 Air filter maintenance

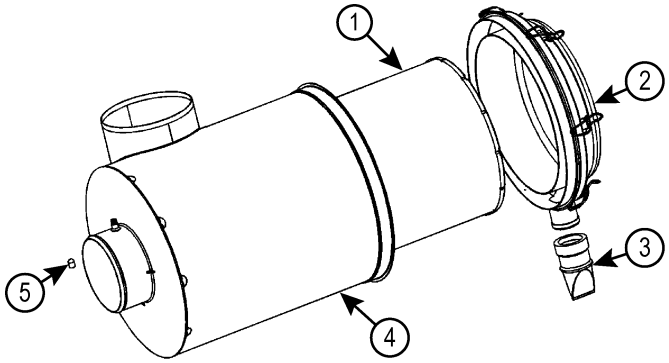

1. Element[1]
2. Cover
3. Vacuator valve
4. Housing
5. Protection cap

[1]Air filter element replacement P/N: 02250155-691

Figure 7-2: Air filter assembly

Refer to *Figure 7-2*. Air filter maintenance should be performed when indicated by the controller, or once a year, whichever comes first. If the filter needs to be replaced, order a replacement element. Below you will find procedures on how to replace the air filter element.

7.8.1 Air filter element replacement

1. Clean the air filter's exterior housing.
2. Release the hold-down clips and remove the end cover.
3. Remove the air filter element by pulling it out of the housing.
4. Clean the housing interior with a damp cloth. **Do not** blow dirt out with compressed air.
5. Replace the element.
6. Reassemble in the reverse order.

7.9 Separator maintenance

Replace the separator element when indicated by the controller or after one (1) year, whichever comes first. The separator element must be replaced. **Do not** attempt to clean the separator element.

7.9.1 Separator element replacement

Refer to *Figure 7-3*. The separator element must be changed when indicated by the controller, or once a year,

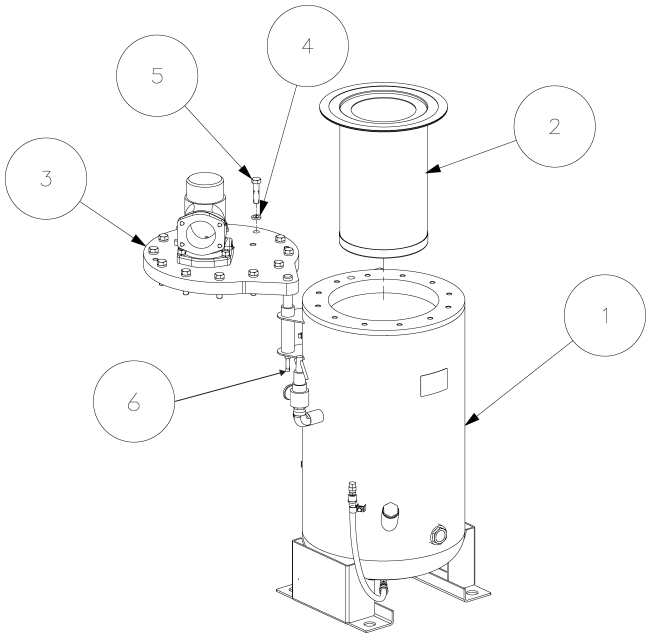

1. Tank
2. Element[1]
3. Lid
4. Lock washer
5. Capscrew
6. Jackscrew

[1]Separator element replacement P/N: 02250242-636

Figure 7-3: Separator element w/Jackscrew

whichever occurs first. Follow the procedure explained below for separator element replacement.

WARNING

High-pressure hazard.

Relieve all pressure from the separator/sump tank and all compressor lines.

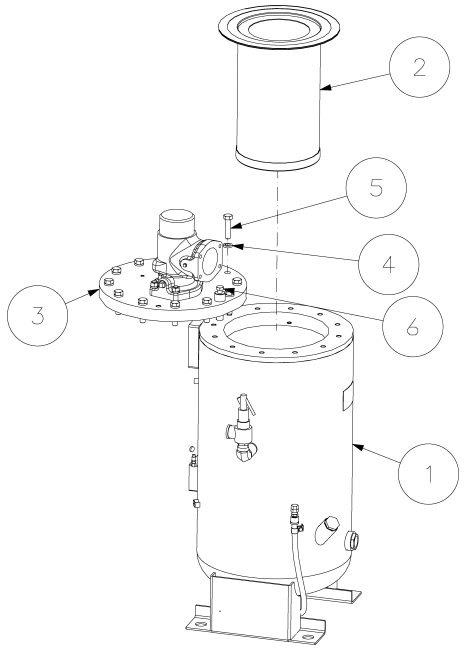

1. Tank
2. Element[1]
3. Lid
4. Lock washer
5. Capscrew
6. Jackscrew Bolt

[1]Separator element replacement P/N: 02250242-636

Figure 7-4: Separator element w/Jackscrew Bolt

1. Disconnect all piping connected to the separator cover plate.
2. Loosen and remove the twelve (12) hex head capscrews (¾ in × 3 in) and lock washers from the cover plate.
   - **Always** discard the lock washers.
3. Raise the cover plate from the separator/sump tank using ½" jackscrew or jackscrew bolt, then pivot the cover plate to the side.
4. Remove the separator element.
5. Scrape any old gasket material from the underside of the cover plate and the separator/sump tank flange
   - **Do not** let any scraps fall into the separator/sump tank.
6. Inspect the separator/sump tank for rust, dirt, etc.
7. Insert a new separator element into the separator/sump tank taking care not to dent the element against the tank opening.
   - **Do not** remove the staples from the separator element.
   - **Do not** use any type of gasket eliminator.
   - **Do not** use anti seize agents to prevent gasket from sticking to the tank and lid.
8. Replace the cover plate, lock washers and capscrews. Torque to 250 ft·lbs (339 N·m).
   - **Always** use new lock washers.
9. Verify continuity between the separator element and the separator/sump tank.
10. Reconnect all piping.
11. Clean the return line strainer before restarting the compressor.

7.10 Oil return / sight glass maintenance

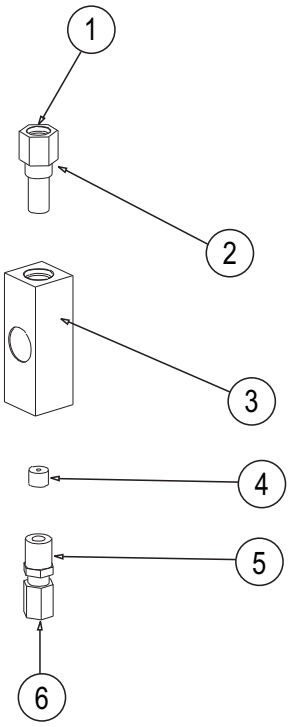

1. To separator/sump tank
2. Filter assembly[1]
3. Sight glass / orifice block
4. Brass plug orifice
5. Female tube connector
6. To unit

[1]Oil return filter replacement kit P/N: 02250117-782

Figure 7-5: Oil return / sight glass

Refer to *Figure 7-5*. The oil return/sight glass subassembly is attached to the side of the separator tank. Oil return/sight glass maintenance should be performed on a routine basis parallel to that of the fluid filter, or as indicated in the troubleshooting section of this manual. The maintenance on an oil return/sight glass is mainly concerned with the condition of the filter assembly. Order filter assembly No. 02250117-782, and use the following instructions as a guide.

1. Disconnect the tube at bottom of sight glass.
2. Unscrew the sight glass assembly where the elbow fitting joins the strainer/filter.
3. Remove used filter assembly, and replace with new assembly.
4. Inspect and clean the orifice inside the sight glass blocks. The orifice must be removed with an allen wrench.
5. Coat/lubricate the O-rings with silicone grease.
6. Reattach the connectors to the sight glass/orifice blocks.

7.11 Pressure regulator adjustment

(for fixed speed non-spiral valve machines only)

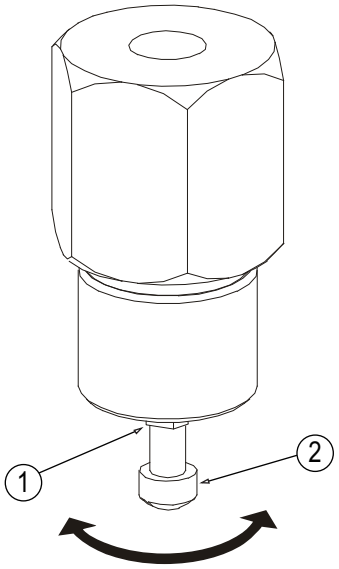

1. Locking nut
2. Adjustment screw

Figure 7-6: Regulator adjustment

Refer to *Figure 7-6*. Start the compressor and adjust the service valve to maintain service air pressure approximately at 1 psi over rated pressure. Turn the inlet valve regulator adjusting screw until air just begins to escape from the control air orifice, located at the bottom of the regulator. Lock the adjusting screw in place with the locknut. The regulator is now properly set.

7.12 Water condensate drain maintenance

It is necessary to periodically clean the strainer. Remove the hex cap from the strainer and remove the strainer screen. Clean the screen and reinstall. If the screen is damaged, the strainer assembly must be replaced.

7.13 Control line strainer

The regulator and solenoid valve(s), which control the compressor, are protected by a strainer. Every 12 months it is necessary to clean the strainer. Remove the hex cap from the strainer and remove the strainer screen. Clean the screen and reinstall. If the screen is damaged, the strainer assembly must be replaced.

7.14 Shaft coupling maintenance

The compressor unit and motor are rigidly connected via a mounting adapter housing. This arrangement makes coupling alignment unnecessary. The coupling is a jaw type in shear. If the elastomeric element requires replacement due to wear or breakage, perform the following steps.

1. Remove the protective grill from the housing.
2. Loosen the retaining screw located on the outer sleeve. Slide the sleeve to one side, exposing the coupling element.
3. Unwrap the coupling element from the coupling jaws.
4. Install the new element by wrapping it around the jaws, engaging the cogs on the element into the jaws.
5. Reinstall the outer sleeve and the protective grill. Secure the outer sleeve by tightening the two screws to 45 in·lbs (5 N·m).

7.15 Shell and Tube Water Cooler Maintenance and Cleaning

7.15.1 Cleaning Interval

Suggested cleaning interval is 1 year or 8,000 hours minimum. Note that identical processes in different areas could require vastly different cleaning regiments due to variations in water mineral content and quality. Cooler performance should be monitored regularly, and cleaning and inspection intervals may need to be adjusted based on conditions observed.

CAUTION

- Be careful to avoid damaging the tubes when mechanically cleaning a tube bundle.
- Cleaning compounds must be compatible with the metallurgy of the exchanger.
- Before disassembly, the user must ensure that the unit has been completely shut down and depressurized, vented, drained, and neutralized and/or purged of hazardous material.

DO NOT:

- Introduce steam into an individual tube, as this can cause differential expansion stresses, with possible leakage at the tube joints.
- Introduce air into units handling volatile liquids.

WARNING

Substances used in and to clean the heat exchangers are HAZARDOUS chemicals! Follow all local, state, and federal ordinances in the removal and disposal of these substances.

NOTE

Tube bundle and/or individual tubes cannot be removed. The bundle will be rendered useless if tubes are removed. Leaking tubes must be plugged.

Replacement Parts can be ordered directly from Sullair.

Inspection of shell and tube heat exchangers at regular intervals, as frequently as experience indicates, can identify potential problems before any structural damage occurs. The inspection should include an examination of both the interior and the exterior of the unit. Failure to keep all tubes clean can result in severe flow restrictions through some tubes, which could cause damaging thermal stresses, resulting in leaking tube joints or structural damage to other components.

Regular, scheduled cleaning is important to prevent excessive deposits in the tubes, since these deposits may result in plugged tubes. Resultant overheating may be followed by leakage of the expanded joints or result in other damage.

Cleaning of the shell and tube heat exchangers is important to assure the equipment provides satisfactory performance. The equipment may be cleaned by either chemical or mechanical methods. The method selected must be the choice of the operator of the plant and will depend on the type of deposit and the facilities available in the plant.

If selecting the mechanical method, ensure the tool is not sharp enough to cut the metal of the tubes.

Gaskets and gasket surfaces should be thoroughly cleaned and should be free of scratches and other defects. Gaskets should be properly positioned before attempting to re-tighten bolts. When a heat exchanger is dismantled for any cause, it must be reassembled with new gaskets. This will tend to prevent future leaks and/or damage to the gasket seating surfaces of the heat exchanger. Composition gaskets become dried out and brittle so that they do not always provide an effective seal when reused. Metal or metal-jacketed gaskets, when compressed initially, conform to match their contact surfaces. In so doing, they are work hardened. If reused, they may provide an imperfect seal or result in deformation and damage to the gasket contact surfaces of the exchangers. Bolted joints and flanges are designed for use with the gasket specified. Substitution of a gasket of different construction or improper dimensions may result in leakage and damage to gasket surfaces. Therefore, any gasket substitutions should be of compatible design. Any leakage at a gasketed joint should be rectified and not permitted to persist as it may result in damage to the gasket surfaces.

7.16 Troubleshooting

7.16.1 Introduction

The information contained in the Troubleshooting Guide has been compiled from field report data and factory experience. It contains symptoms and usual causes for the described problems. However, **do not** assume that these are the only problems that may occur. All available data concerning a problem should be systematically analyzed before undertaking any repairs or component replacement procedures.

A detailed visual inspection is worth performing for almost all problems and may avoid unnecessary additional damage to the compressor. Always remember to:

- Check for loose wiring.
- Check for damaged piping.
- Check for parts damaged by heat or an electrical short circuit, usually apparent by discoloration or a burnt odor.

Should your problem persist after making the recommended check, consult your nearest Sullair representative.

7.16.2 Troubleshooting guide

Symptom	Probable cause	Remedy
Sluggish/ slow/ unresponsive display	Machine may have had long-term UV/sunlight exposure	Remove from UV/sunlight exposure
	Temperature may be outside design specifications	Maintain machine within design specifications
Touchscreen goes to calibration mode	Screen may be damaged due to excessive force	Do not use tools or any other instrument to operate touch screen
		Use only finger or stylus to operate display while only using moderate force
		Replace screen
Compressor will not start	Main disconnect switch open	Close switch.
	Line fuse blown	Replace fuse.
	Motor starter overload tripped	Reset. Should trouble persist, check whether motor starter contacts are functioning properly.
	Low incoming line voltage	Check voltage. Should voltage check low, consult power company.

Symptom	Probable cause	Remedy
Compressor shuts down with air demand present	Loss of control voltage	Check power supply for 24V DC output. Replace power supply if necessary.
	Low incoming voltage	Consult power company.
	Excessive operating pressure	Reset. If trouble persists, check that line pressure does not exceed maximum operating pressure of the compressor (specified on nameplate).
	Separator requires maintenance indicated by controller	Replace separator.
	Machine programmed for wrong pressure setting	Reprogram.
	Defective solenoid valve	Solenoid valve should cause inlet valve to close when unload pressure is exceeded. Repair if defective.
	Defective blowdown valve	Blowdown valve should exhaust separator/ sump tank pressure to 25 psig (1.72 bar) when maximum operating pressure is reached. Repair if defective.
	Cooling water temperature too high	Reduce water temperature to 85°F (29.4°C) or less. Water-cooled only.
	Cooling water flow insufficient	Check water lines and valves (water-cooled only).
	Cooler plugged	Clean tubes. If plugging persists, install water conditioner (water-cooled only).
	Cooling air flow restricted	Clean cooler and check for proper ventilation.
	Ambient temperature is too high	Provide sufficient ventilation.
	Low fluid level	Add fluid.
	Clogged filter	Change the fluid filter element.
	Thermal valve not functioning properly	Replace element.
	Water flow regulating valve not functioning properly	Change (water-cooled only).
Compressor will not build full discharge pressure	Air demand is too great	Check service lines for leaks or open valves.
	Dirty air filter	Check the filter indicator and inspect and/or change element if required.
	Inlet valve bleed orifice plugged	Ensure control line bleed orifice located inside inlet valve is not plugged.
	Pressure regulator out of adjustment	Adjust regulator according to control adjustment instructions in the Maintenance section.
	Defective pressure regulator	Replace regulator.
	Defective unload solenoid valve	Check that the valve closes when energized. Replace the coil or the complete valve if defective.

Symptom	Probable cause	Remedy
Line pressure rises above unload pressure set-point	Leak in control system causing loss of pressure signals	Check for leaks.
	Inlet valve stuck open	Remove the intake hose and check for inlet valve operation.
	Defective unload solenoid valve	Check that the valve is open when de-energized. Replace if necessary.
	Plugged control line strainer	Clean strainer (screen and O-ring replacement kit available).
	Defective blowdown valve	Check that separator/sump tank pressure is exhausted to the atmosphere when the solenoid valve opens. Repair or replace if necessary (kit available).
Excessive compressor fluid consumption	Clogged return line or orifice	Clean strainer (screen and O-ring replacement kit available).
		Clean orifice.
	Separator element damaged or not functioning properly	Change separator.
	Leak in the lubrication system	Check all pipes, connections and components.
	Excess fluid foaming	Drain and change.
	Fluid level too high	Drain and change. Check that the compressor temperature has not dropped below 170°F (76.7°C).
Pressure relief valve opens repeatedly	Defective pressure relief valve	Replace.
	Plugged separator	Check separator differential.
Liquid water in compressed air lines	Plugged strainer in moisture drain line	Clean and service strainer located in the line off the bottom of the water separator.
	Water vapor condensation from cooling and compression occurs naturally	Remove the water vapor from compressed air prior to distribution through the air system. Check operation of aftercooler and moisture separator. Install a compressed air dryer sized for the flow and dryness level required. (Note: Filters may also be required to remove particulates, liquid oil aerosols or for oil vapor removal. Change cartridges as recommended by the filter manufacturer). Check all drain traps routinely to insure their proper operation. Maintain them regularly.
	Defective drain valve	Ensure valve opens and closes using the test button.

Notes:

Subject to EAR, ECCN EAR99 and related export control restrictions.

Hitachi Global Air Power US, LLC

1 Sullair Way
Michigan City, IN 46360 USA
www.sullair.com
1-800-SULLAIR (USA only)
1-219-879-5451 (non-USA)

Information and specifications are subject to change without prior notice.
Subject to EAR, ECCN EAR99 and related export control restrictions.