USER MANUAL

SUPERVISOR CONTROLLER™

PART NUMBER:
02250146-049 R02

KEEP FOR FUTURE REFERENCE

WARRANTY NOTICE

Failure to follow the instructions and procedures in this manual or, misuse of this equipment will VOID its warranty!

©SULLAIR CORPORATION

The information in this manual is current as of its publication date, and applies to compressor **serial number**:

200906010000

and all subsequent serial numbers.

Always air. Always there.

AIR CARE SEMINAR TRAINING

Sullair Air Care Seminars are courses that provide hands-on instruction for the proper operation, maintenance, and servicing of Sullair products. Individual seminars on Stationary compressors and compressor electrical systems are offered at regular intervals throughout the year at Sullair's corporate headquarters training facility located at Michigan City, Indiana.

Instruction includes training on the function and installation of Sullair service parts, troubleshooting common faults and malfunctions, and actual equipment operation. These seminars are recommended for maintenance, contractor maintenance, and service personnel.

For detailed course outlines, schedule, and cost information contact:

SULLAIR TRAINING DEPARTMENT

1-888-SULLAIR or
219-879-5451 (ext. 5623)
www.sullair.com
training@sullair.com

- Or Write -

Sullair Corporation
3700 E. Michigan Blvd.
Michigan City, IN 46360
Attn: Service Training Department.

TABLE OF CONTENTS

SECTION 1—SAFETY

3	1.1	GENERAL
3	1.2	PERSONAL PROTECTIVE EQUIPMENT
3	1.3	ELECTRICAL SHOCK
4	1.4	DECALS

SECTION 2—DESCRIPTION

7	2.1	SUPERVISOR KEYBOARD LAYOUT
8	2.2	MAIN DISPLAY
8	2.3	FUNCTION MENU
9	2.4	STATUS—CURRENT PRESSURES, TEMPERATURES, INPUTS AND OUTPUTS
9	2.5	CONTROL PARAMETERS—PRESSURE, TEMPERATURE AND TIMER SETTINGS
10	2.6	MAINTENANCE—PREVENTIVE MAINTENANCE INFORMATION AND TIMERS
10	2.7	FAULT LOG—LOG OF PREVIOUS FAULTS
10	2.8	SENSOR LOG
10	2.9	SEQUENCING—SEQUENCING & COMMUNICATION PARAMETERS
11	2.10	SYSTEM DISPLAY—DISPLAY OF MODES OF MACHINES IN A SEQUENCING SYSTEM
11	2.11	CALIBRATION—CORRECTION FACTORS FOR PRESSURES
12	2.12	TEST
12	2.13	FACTORY SETUP- MODEL SETTINGS.

SECTION 3—START-UP PROCEDURES

15	3.1	MOTOR ROTATION DIRECTION CHECK
15	3.2	INITIAL START-UP PROCEDURE
15	3.3	SUBSEQUENT START-UP PROCEDURE
15	3.4	SHUTDOWN PROCEDURE

SECTION 4—TROUBLESHOOTING

17	4.1	TROUBLESHOOTING INTRODUCTION

TABLE OF CONTENTS

26	4.2	MACHINE BEHAVIOR AFTER A POWER OUTAGE
26	4.3	REMOTE STOP/START INPUT
26	4.4	BROWN OUT INPUT

SECTION 5—WIRING DIAGRAMS

SECTION 6—VARIABLE SPEED DRIVE

33	6.1	SAFETY
34	6.2	OVERVIEW
36	6.3	INSTALLATION
36	6.4	SUPERVISOR DISPLAY AND MENUS
37	6.5	STARTUP OF NEW COMPRESSOR PACKAGE
38	6.6	FAULT AND WARNING CODES
41	6.7	COMMISSIONING YOUR VSD:
41	6.8	AFTER THE FIRST 48 HRS OF OPERATION:
41	6.9	EVERY SIX MONTHS
41	6.10	EVERY TWELVE MONTHS:
42	6.11	CLEANING VSD HEAT SINKS
46	6.12	CLEANING VSD HEAT SINK FILTERS

Section 1

SAFETY

NOTE

OPERATOR IS REQUIRED TO READ ENTIRE INSTRUCTION MANUAL.

1.1 GENERAL

Sullair Corporation and its subsidiaries design and manufacture all of their products so they can be operated safely. However, the responsibility for safe operation rests with those who use and maintain these products. The following safety precautions are offered as a guide which, if conscientiously followed, will minimize the possibility of accidents throughout the useful life of this equipment.

The compressor should be operated only by those who have been trained and delegated to do so, and who have read and understood this Operator's Manual. Failure to follow the instructions, procedures and safety precautions in this manual may result in accidents and injuries. **NEVER** start the compressor unless it is safe to do so. **DO NOT** attempt to operate the compressor with a known unsafe condition. Tag the compressor and render it inoperative by disconnecting and locking out all power at source or otherwise disabling its prime mover so others who may not know of the unsafe condition cannot attempt to operate it until the condition is corrected.

Install, use and operate the compressor only in full compliance with all pertinent OSHA regulations and/or any applicable Federal, State, and Local codes, standards and regulations. **DO NOT** modify the compressor and/or controls in any way except with written factory approval.

While not specifically applicable to all types of compressors with all types of prime movers, most of the precautionary statements contained herein are applicable to most compressors and the concepts behind these statements are generally applicable to all compressors.

1.2 PERSONAL PROTECTIVE EQUIPMENT

A. Prior to installing or operating the compressor, owners, employers and users should become familiar with, and comply with, all applicable OSHA regulations and/or any applicable Federal, State and Local codes, standards, and regulations relative to personal protective equipment, such as eye and face protective equipment, respiratory protective equipment, equipment intended to protect the extremities, protective clothing, protective shields and barriers and electrical protective equipment, as well as noise exposure administrative and/or engineering controls and/or personal hearing protective equipment.

1.3 ELECTRICAL SHOCK

A. This compressor should be installed and maintained in full compliance with all applicable Federal, State and Local codes, standards and regulations, including those of the National Electrical Code, and also including those relative to equipment grounding conductors, and only by personnel that are trained, qualified and delegated to do so.

B. Keep all parts of the body and any hand-held tools or other conductive objects away from exposed live parts of electrical system. Maintain dry footing, stand on insulating surfaces and **DO NOT** contact any other portion of the compressor when making adjustments or repairs to exposed live parts of the electrical system. Make all such adjustments or repairs with one hand only, so as to minimize the possibility of creating a current path through the heart.

C. Attempt repairs in clean, dry and well lighted and ventilated areas only.

D. **DO NOT** leave the compressor unattended with open electrical enclosures. If necessary to do so, then disconnect, lock out and tag all power at source so others will not inadvertently restore power.

E. Disconnect, lock out, and tag all power at source prior to attempting repairs or adjustments to rotating machinery and prior to handling any ungrounded conductors.

DANGER

All field equipment must be tested for electrostatic fields prior to servicing or making contact with the machine using the following or equivalent test equipment:

- **90-600 VAC: Volt detector such as Fluke Model 1AC-A**
- **600-7000 VAC: Voltage detector such as Fluke Networks Model C9970**

It is the responsibility of each organization to provide/arrange training for all their associates expected to test for electrostatic fields.

1.4 DECALS

See *Figure 1-1*. The Supervisor control panel contains several decals which contain necessary information for safe performance. These decals should never be removed. If a decal becomes damaged, contact your nearest Sullair Department for replacement parts (Note: When ordering new decals, use part number printed on decal face).

Figure 1-1: Decals

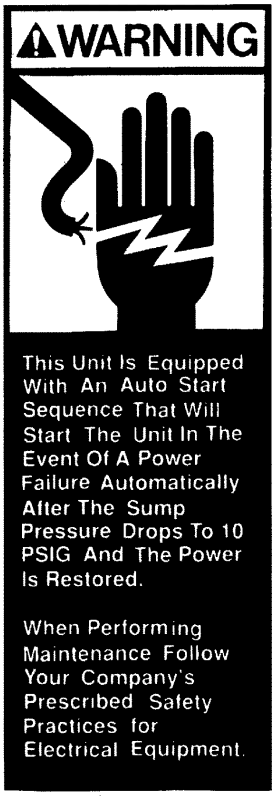

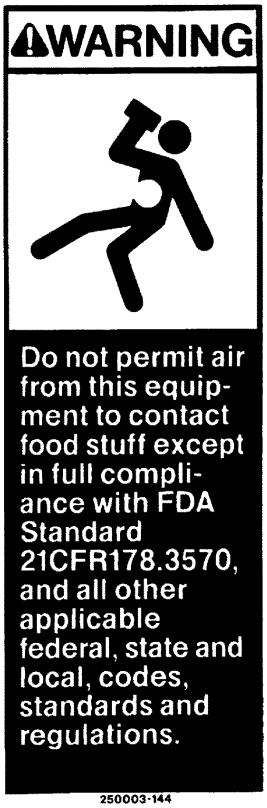

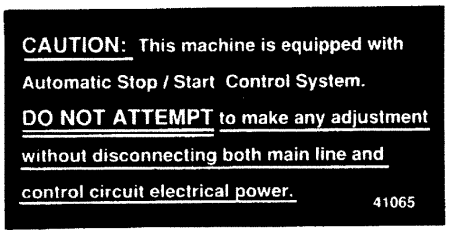

KEY NO.	PART NO.	QTY	DESCRIPTION	NOTE
1	250017-903	1	decal, warning auto start	
2	250027-935	1	decal, danger breath air	(I)
3	250003-144	1	sign, warning “food grade” lube	
4	041065	1	decal, auto start	

(I) OSHA and FDA guidelines are superseded by any Federal, State or Local regulations whenever applicable.

NOTES

Section 2
DESCRIPTION

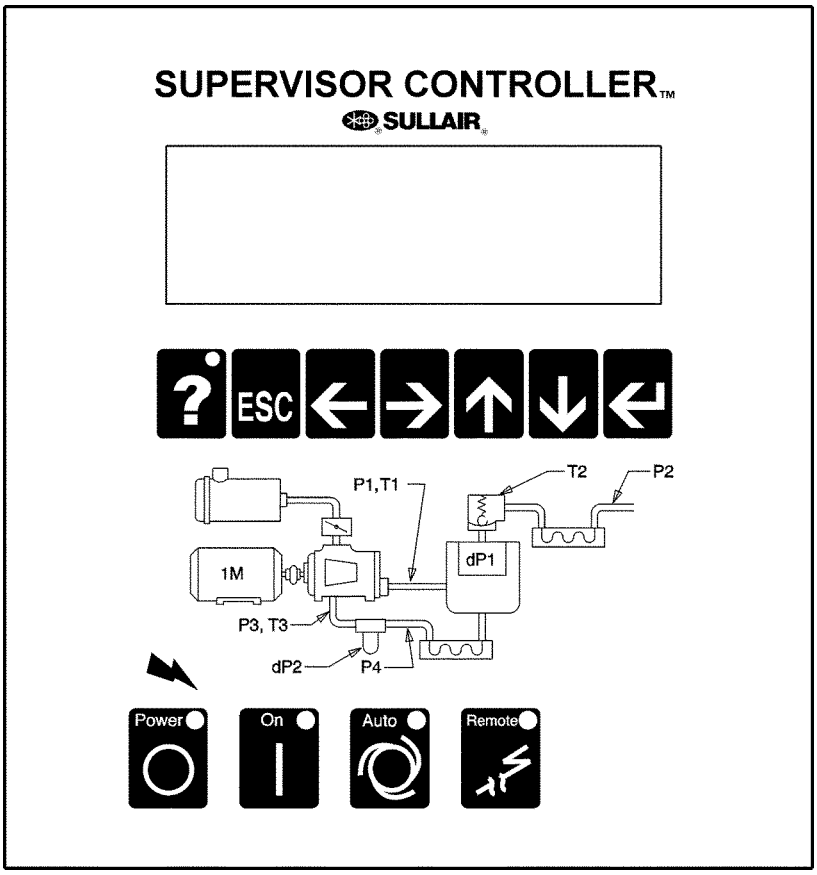

Figure 2-1: Supervisor Controller Panel

2.1 SUPERVISOR KEYBOARD LAYOUT

Refer to *Figure 2-1*. The Display module has eleven keys grouped in two rows.

The top row has the following seven keys :

?—Help key, used to display possible causes of and correction for an alarm or fault.

ESC—Returns to main display.

←—Used to edit text or numbers (move cursor left).

→—Used to edit text or numbers (move cursor right).

↑—Used to change numbers or text, or scroll.

↓—Used to change numbers or text, or scroll.

↵—Used to select an item from a menu, or start

and end an edit on a parameter.

The bottom row has four keys :

—Stop, stops machine. Clears faults and warnings if machine is stopped.

—Run, starts machine. Clears warnings if machine is running.

—Toggles auto mode.

—Toggles Local/Remote mode. This can be used to disable sequencing.

2.2 MAIN DISPLAY

Line 1—Machine state :

E-Stop—E-Stop button pressed, or auxiliary E-Stop present.

Stopped—Machine not running.

Unloaded—Machine running unloaded.

Loaded—Machine running, loaded and modulating.

Full Load—Machine forced to full load. (Used only in sequencing modes).

Remote Stop—Compressor is off but armed to start. The machine will start when the remote start contact is closed. NOTE : the machine may start at any time.

Seq Stop—Compressor is off but armed to start. The machine will start when the sequencing conditions meet the criteria to start. NOTE: the machine may start at any time.

Trim—Machine running, loaded and modulating in a sequenced system.

Line 2—Fault or Warning, blank means no fault or warning is present. If there are multiple alarms, they will be shown for 2 seconds each. If an alarm is active, pressing the '?' key will give troubleshooting information on that alarm.

Line 3—P2—Line pressure

Line 4—T1—Discharge Temperature

2.3 FUNCTION MENU

While in the main display, if any of the arrow keys are pressed, the function menu is displayed. This menu is used to view status or edit parameters.

The function menu has the following entries :

Status—Current pressures, temperatures, inputs and outputs.

VSD Satus—(VSD packages only) See *Section 6*.

Control Parameters—Pressure and temperature and timer settings.

Maintenance—Preventive maintenance information and timers.

Fault Log—Log of previous faults.

Sensor Log—Log of sensor readings leading up to a fault.

Sequencing—Sequencing parameters.

System Display—Display of modes of machines in a sequencing system.

Calibration—Correction factors for pressures.

Test—Used by Sullair personnel for troubleshooting serial communications.

Factory Setup—Model settings.

VSD Setup—(VSD Packages only) See *Section 6*.

To select a function, use the up and down arrow keys to scroll to the desired function as indicated on last line of display, then press the enter key.

After entering a function, the information can be viewed by using the up and down arrow keys. If the function shows status then values cannot be changed. If the function displays parameters, then the values can be changed.

To change a value, scroll to the line to be changed using the up arrow and down arrow keys, and push the enter button. The value can be changed by using the up arrow or down arrow keys. When editing is finished, pushing the enter key will fix the value. If during a change the ESC key is pushed, editing is terminated and the original value is reset.

The left and right arrow keys can be used to move to other digits or letters in a value. For example to change a value from 100 to 500, the left arrow key can be used to position the cursor to the 1 digit in the 100, and the up arrow key used to increment the digit to 5.

Text fields can also be edited in the same manner. Push the enter key to start the edit, use the left and

right arrow keys to move to the letter to be changed, then use the up and down arrow to change the letter. Push the enter key to complete the edit. The following are detailed descriptions of the various displays.

2.4 STATUS—CURRENT PRESSURES, TEMPERATURES, INPUTS AND OUTPUTS

All inputs and outputs are displayed showing both the designator and the description (eg. T1- Discharge) along with the selected temperature (C or F) or pressure (psi, bar, kPa) units. Digital inputs and outputs are shown either as a ‘0’ (zero) or ‘1’ (one). Zero is off and one is on. This is a view only display.

The order of display is :

Temperatures—T1 through T4 depending on model.

Pressures—P1 through P4 depending on model.

Delta pressures—dp1 through dp3 depending on model.

Load Hours—Hours machine has run loaded.

Run Hours—Hours machine has run loaded or unloaded.

Load Cycles—Number of load/unload cycles.

Starts—Number of times machine has started.

E-Stop String—E-Stop push button.

Aux E-Stop—Auxiliary E-Stop, wired by customer.

Digital Inputs—D1 through D10, depending on model.

Relay Outputs—K1 through K8, depending on model.

2.5 CONTROL PARAMETERS—PRESSURE, TEMPERATURE AND TIMER SETTINGS

Parameters that control the operation of the machine are viewed and set using this display. These parameters may vary by machine model.

The Control Parameters are :

Unload pressure—The pressure where the machine is unloaded. For example if this parameter is set to 110 psi (7.6 bar) the machine will unload when the line pressure is above 110 psi (7.6 bar).

Load delta—The pressure differential below the unload pressure where the machine is loaded. For example if the unload pressure is set to 110 psi (7.6 bar) and the load differential is set to 10 psid (0.7 bar), the machine will load when the line pressure goes below 100 psi (6.9 bar).

Setpoint—(VSD packages only) The targeted pressure for the variable speed controls. This is normally adjusted near the bottom of the load/unload band above. The speed will be adjusted to maintain this pressure. Refer to *Section 6* for additional details.

Unload Time—If the machine is running in AUTO mode, this parameter specifies the amount of time that the machine will run unloaded before shutting off. If the time is set less than 15 minutes (for example 5), there may be times when the machine will run unloaded for more than 15 minutes. This is because there is another timer that keeps the machine from being started more than four times an hour. This secondary timer is disabled when a machine is configured for VSD motor control.

Drain Interval—If the machine has an electric solenoid drain, this parameter and the following parameter (Drain Time) are used to turn on the drain. The interval is the time between activations of the drain and the Drain Time is the length of the time energized. This does not apply to the Sullair SCD zero loss drain, which is not controlled or monitored by the Supervisor.

Drain Time—Length of time that drain is energized.

Restart time—

⚠ WARNING

Enabling this function also enables automatic restart after power recovery. Be sure to depress the Emergency Stop button to defeat this function when automatic start is to be prevented.

Time to wait after power up before starting machine. This parameter is used to keep several machines from starting at the same time after power up, or to delay start until other equipment is started. If disabled parameter is zero, the machine will not automatically start after power up. If this parameter is a number larger than zero, the machine restarts after a delay defined by this time. For example, if the

Restart Time is set to 10 seconds, then the machine will be enabled to start after 10 seconds.

Wye to delta transition timer—Also used to control the closed inlet start valve. Disable by setting to zero (0), standard for full voltage start. Requires approximately 4-6 seconds for wye-delta or solid state starting.

Modulate—Default state is Yes for normal machine control. Select No for Load/No Load operation.

NOTE

Unload pressure MUST be lowered to rated pressure when using Load/No Load mode.

Language select—English, German, Spanish, Italian and French may be selected for display language.

Temp Units—Temperature units may be set to degrees F or degrees C.

Press Units—Pressure units may be set to psi, bar, or kPa.

(VSD packages only)—Additional adjustments for VSD operation are shown in *Section 2*.

2.6 MAINTENANCE—PREVENTIVE MAINTENANCE INFORMATION AND TIMERS

The following lines are on the Maintenance display. Information—The top two lines may be changed to advise what to do when there is a maintenance warning. For example a distributor can put in his name and telephone number.

Ser. No—Serial number of machine.

Warn at—When the following drop below this number, a warning is issued.

Oil Filter hours—Hours before oil filter change.

PN—Oil Filter part number.

Separator hours—Hours before separator change.

Prim.—Primary separator part number.

Sec.—Secondary separator part number.

Air Filter hours—Hours before air filter change.

Prim.—Primary air filter part number.

Sec.—Secondary air filter part number.

Oil hours—Hours before oil change.

PN—Oil part number.

Oil Anal.—Hours before oil analysis.

These hours and part numbers can be changed using the enter and arrow keys.

2.7 FAULT LOG—LOG OF PREVIOUS FAULTS

The fault log shows the last 16 faults that occurred. The top line of the display shows the run hours where the fault occurred, and the second line shows the fault. The faults can be scrolled through using the up and down arrow keys. They are ordered by most recent first. (ie. when the function is entered the most recent fault is displayed. Pressing the down arrow displays the previous fault etc).

2.8 SENSOR LOG

Log of sensor readings leading up to a fault.

The sensor log shows the sensor readings leading up to a fault. The top line shows the last fault. The following lines show T1, T2, P1 & P2. Each line represents readings that are 5 seconds apart for one minute, then one minute apart for 10 minutes. There is a second set of readings for T3, T4, P3 & P4.

2.9 SEQUENCING—SEQUENCING & COMMUNICATION PARAMETERS

The following parameters can be viewed and edited. For more details on sequencing see the Supervisor Sequencing and Protocol Manual.

Sequence By—Sequencing mode can be set to:

Disabled—Control does not do any sequencing.

Remote—Enables Remote Start/Stop, Remote Load/Unload and Local/Master inputs

Hours—Uses the Seq Hrs parameter to deter mine order of sequencing

Number—Uses the Com Number to determine order of sequencing

Seq Hrs—This is an hour counter used when the 'Sequence By' parameter is set to 'Hours'. Each hour

that the machine is running increments this counter. When then 'Sequence By' parameter is set to 'Hours', the machine with the least amount of Seq Hrs is started first, and the machine with the most Seq Hrs is shut off first.

Com Number—Communications number. When two or more machines are connected together using the network (RS-485 channel), each machine must have a unique number or address. These must be assigned in numerical order. For example in a three machine system the machine communications numbers should be 1, 2 & 3.

Machines—This is the total number of machines connected to the network (RS-485 channel). For example in a three machine system, this parameter should be set to 3. Up to sixteen machines may be networked if all have Supervisor Controllers and limited to eight if some have Supervisor II's.

Low Press—This is the lowest pressure allowed before immediately starting a machine. Recovery Time—This parameter keeps multiple machines from loading, unloading and starting at the same time. For example if a low pressure condition causes a machine to start, the next machine will not start unless the Recovery Time has elapsed, and the pressure has not recovered (i.e., has risen over 'Low Press').

Rotate—This parameter is used only in very special cases.

NOTE

Leave this parameter disabled unless instructed by Sullair Service Personnel.

The only time this parameter should be used is in a situation where, once a machine is started, it never stops (ie. the unload timer never expires). This can happen when the load matches the output of the machine, all the time. In this case the machine will never unload and shut off. The rotate forces the machine to stop after it's Seq Hrs. are greater that the other machines. For example in a two machine system, with Rotate set at 100 hrs. The machine that is running will shut off when the Seq Hrs. are 100 more that the machine that is stopped.

Minute, Hour, Day, Month, Year—For Controllers manufactured after April 2009 or if the Communications Module is present in the system, the time and date can be set using these parameters.

2.10 SYSTEM DISPLAY—DISPLAY OF MODES OF MACHINES IN A SEQUENCING SYSTEM

Note that this display is only applicable when there are two or more machines connected to the communications network (RS-485) and the Sequence By parameters on each machine are set to 'Hours' or 'Number'.

The columns are described below

Communication Number Status—

E—Emergency Stop

M—Manual stop

R—Remote stop

B—Standby

S—Starting

U—Unloaded

L—Loaded

T—Trim machine

F—Full load

Sequencing Hours

Capacity—Not used at this time.

Local System Pressure—Pressure read by machines pressure transducer.

The top line is a legend that describes each column. The right hand number on the top line is the system pressure. The system pressure is the highest pressure reading of all the machines. Note that the local pressure readings can be used to determine what machines may need to be calibrated. The system pressure transducers on all machines should read within 1(one) psi of one another. The calibration function can be used to set the readings to be the same.

2.11 CALIBRATION—CORRECTION FACTORS FOR PRESSURES

The first line of this display is the password. If the password is 0 then the following parameters are not protected and can be changed. If the password is non-zero, then enter the displayed number plus 4 to enable changing the parameters. For example if the number displayed is 10 then changing the password to 14 will enable editing.

The four pressures P1, P2, P3 & P4 as well as the differential pressure dP1 can be calibrated. The number on the right hand side of the line is added to the transducer reading to give the calibrated reading. The calibrated reading is shown in the middle of the line.

Cap and KW calibration (VSD packages only) may be used to adjust values shown on VSD Status displays. These are factory set to nominal values (100%), but may be adjusted as desired.

There are also three other parameters in the calibration function:

Protect—When set to yes, protects the control parameters from change.

Fault on Warn—Force fault on warning.

F**orce Unload—**When set to yes, forces the machine to unload.

2.12 TEST

Used by Sullair personnel for troubleshooting of serial communications.

2.13 FACTORY SETUP- MODEL SETTINGS.

The factory setup display is used by Sullair personnel to initially set up the machine. The following values reflect the machine configuration.

Model—Model number of machine.

Cooling—Air or Water.

Press Trans—Pressure transducer range 200, 250, 500.

P1 Max—Maximum discharge pressure.

KT Fluid—Yes or No, indicating fluid.

Water Switch—Water pressure switch, Yes or No.

Oil Switch—Oil pressure differential switch, Yes or No.

Min Load Psi—Minimum acceptable load P1 pressure setting. Separator Maintenance warning is disabled for loaded P1 pressures below this value (i.e., during start-up).

Lube Cycle—Pre-lube/ Post-lube function timer - 0 seconds (disabled) to 30 seconds.

K8 Option—K8 output relay function selector—Disabled, Oil pump prelube and postlube control, Master Control for special external sequence control.

Stop Timer—Time to run machine before stopping.

Protect—Protect control parameters.

Load Hours—Hours machine was running and loaded.

Run Hours—Hours machine was running loaded and unloaded.

Load Cycles—Number of load/unload cycles.

Starts—Number of machine starts.

Capacity—Maximum capacity of machine.

Spiral Valve—(VSD packages only) Yes or No, indicating spiral valve control.

VSD- Describes signal from Supervisor controls to the VSD controls:

> **None**—No VSD
>
> **Pressure**—The Supervisor pressure signal is connected to a drive analog input
>
> **Serial**—The drive is connected on the Supervisor serial data bus
>
> **Speed**—The Supervisor provides a speed signal to a drive analog input.

Com Module—Yes/No Enables or disables the communication module if installed.

Table 2-1: Supervisor Controller Menu Tree

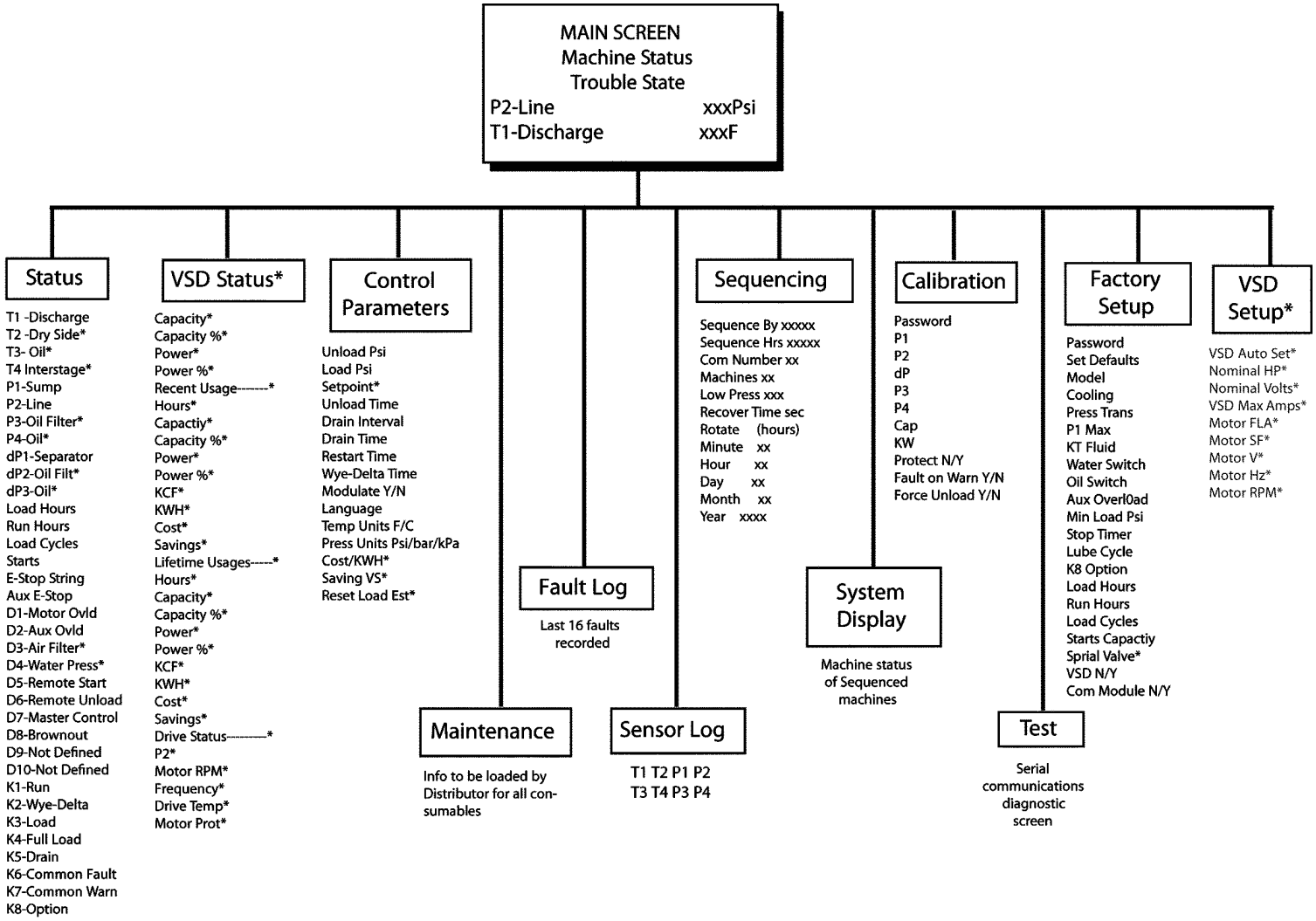

* These parameters do not apply to some models.

Section 3

START-UP PROCEDURES

3.1 MOTOR ROTATION DIRECTION CHECK

After the electrical wiring has been done, it is necessary to check the direction of the motor rotation. With the control system in MANUAL mode, press the | and ○ pads in succession to bump start the compressor. When looking at the motor from the end opposite the compressor unit, the shaft should be turning clockwise on all gear driven models, and counterclockwise on direct drive models. If the motor shaft is not turning in the proper direction, disconnect the power to the starter and exchange any two of the three power input leads, then recheck rotation. A “Direction of Rotation” decal is located on the coupling guard between the motor and compressor to show proper motor/compressor rotation.

Variable speed drive packages will have main motor direction set at the time of construction, but the fan direction is affected by installation. If fan-cooled, ensure that fan rotation is correct. To change direction, disconnect the power and exchange any two of the three fan motor leads at the fan motor starter.

3.2 INITIAL START-UP PROCEDURE

The following procedure should be used to make the initial start-up of the compressor.

1. Be sure that all preparations and checks described in the Installation Section have been made.
2. Read the preceding pages of this manual thoroughly.
3. Jog motor to check for correct rotation of fan (refer to *Section 3.1*).
4. Start the compressor in the desired operating mode | or ⟲.
5. Slowly open the shut-off valve to the service line.
6. Check for possible leaks in piping.
7. Slowly close the shut-off valve to assure proper nameplate pressure unload setting is correct. The compressor will unload at nameplate pressure. If adjustments are necessary, see Control System Adjustment section in the compressor operator’s manual.
8. Observe the operating temperature. Refer to compressor operator’s manual for acceptable operating range. If temperature exceeds this range, the cooling system and installation environment should be checked.
9. Open shut-off valve to the service line.
10. Reinspect the compressor for temperature and leaks the following day.

3.3 SUBSEQUENT START-UP PROCEDURE

On subsequent start-ups, check that the proper level is visible in the fluid sight glass and simply press the START | or AUTO MODE ⟲ button. When the compressor is running, observe the instrument panel and maintenance indicators.

3.4 SHUTDOWN PROCEDURE

To shut the compressor down, simply press the STOP ○ button.

NOTES

Section 4
TROUBLESHOOTING

4.1 TROUBLESHOOTING INTRODUCTION

NOTE

Whereas *Section 4.1* and *Section 4.2* portray common systematic setbacks that can occur during controller operation, for a more thoroughly in-depth coverage of machine operation setbacks, consult the Troubleshooting Section in the machine's operator's manual.

The information contained in the Troubleshooting chart has been compiled from factory experience. It contains symptoms and usual causes for the described problems. However, DO NOT assume that these are the only problems that may occur. All available data concerning the trouble should be systematically analyzed before undertaking any repairs or component replacement procedures.

A detailed visual inspection is worth performing for almost all problems and may avoid unnecessary additional damage to the compressor. Always remember to:

a. Check for loose wiring.

b. Check for damaged piping.

c. Check for parts damaged by heat or an electrical short circuit, usually apparent by discoloration or a burnt odor.

Should your problem persist after making the recommended check, consult your nearest Sullair Distributor or the Sullair Corporation factory Service Department.

Table 4-1: Troubleshooting Guide—Supervisor Controller

Message	Model	Enable	Probable Cause	Remedy
Air Filter Maint	ALL	ALWAYS	Differential Pressure Across Inlet Filter High	Replace filter
				Check inlet filter pressure switch.
Aux Motor Overload	ALL	ALWAYS	Auxiliary Motor Tripped on Cooling Fan, Oil Pump or Other Motor	Reset auxiliary overload after heater element cools. Verify correct motor amps.
				Check for loose connections
				Check motor starter contact for proper operation.
				Check line voltage, if low consult power company.
E-Stop	ALL	ALWAYS	E-Stop Button Active	Release button.
E-Stop Push Button				Check wiring

Table 4-1: Troubleshooting Guide—Supervisor Controller

Message	Model	Enable	Probable Cause	Remedy
E-Stop	ALL	ALWAYS	Auxiliary E-Stop String Open	Check auxiliary E-Stop devices.
E-Stop String				Check wiring.
Low Water Pressure	ALL	Water-cooled	Cooling Water Pressure Below 10 psi (0.7bar)	Check for closed valves or broken pipes.
Oil Change Due, Oil Filter Change, Separator Change Due, Air Filter Change, Oil Analysis Due, Maintenance Due	ALL	ALWAYS	Maintenance Due	Select Maintenance from menu to see service due and part numbers.
Main Motor Overload	ALL	ALWAYS	Main Motor Overload	Reset overload after heater element cools down.
				Make sure compressor is properly configurated.
				Make sure load pressure is set below limit of compressor.
				Check motor starter contacts for proper operation.
				Check line voltage, if low consult power company.
I/O Mod Com Error, Com Mod Com Error, Motor Mod Com Error, VSD Com Error	ALL	ALWAYS	Module Network Error; The Network that Connects the Display Module, I/O Module and Other Optional Modules is Not Working Correctly	Check wiring.
				Replace module referred to in error message, if problem persists replace display module.
Oil Filter Maint., dP2 Oil Filter High	ALL	ALWAYS	Pressure Across Oil Filter Above 20 psi (1.4 bar) While Running	Oil filter clogged, replace oil filter.
	FLOODED	ALWAYS		Low ambient temperature, sump heater may be required in ambients below 40°F (4°C).
	ALL	ALWAYS		Sensor failure, check sensor, wiring and tubing.

Table 4-1: Troubleshooting Guide—Supervisor Controller

Message	Model	Enable	Probable Cause	Remedy
P3 Oil Pressure Low, dP3 Oil Pressure Low	ALL	ALWAYS	Oil Pressure Low	Oil pump failure, consult Sullair service department.
				Oil filter clogged; replace oil filter.
	FLOODED	ALWAYS		Sump oil level low, replenish oil to proper level.
				Low ambient temperature, sump heater may be required in ambients below 40°F (4°C).
				Oil pump may be required for remote coolers.
P1 Sensor Fail, P2 Sensor Fail, P3 Sensor Fail, P4 Sensor Fail, T1 Sensor Fail, T2 Sensor Fail, T3 Sensor Fail, T4 Sensor Fail, T5 Sensor Fail	ALL	ALWAYS	Sensor or Wiring Failure	Check sensor wiring.
				Check sensor.
dP1 Separator High	FLOODED	ALWAYS	Pressure Across Separator High	Plugged separator elements, replace.
				Pressure sensor failure, check sensor wiring.
Factory Setup Error	ALL	ALWAYS	The Factory Setup Information Needs to be Reviewed for Correct Values	If problem persists replace Supervisor.
P1 Sump Pressure High	FLOODED	ALWAYS	Sump Pressure High (Poppet, Sullicon, Spiral, Blowdown or Pneumatic Valve Failed)	Check valves. Check Sullicon adjustment (see Control Adjustment section in the compressor operator's manual).
				Solenoid valves, check operation and wiring.
	ALL	ALWAYS		Pressure regulator, check adjustment and operation.
	FLOODED	ALWAYS		Check minimum pressure check valve (not applicable to Oil Free compressors).

Table 4-1: Troubleshooting Guide—Supervisor Controller

Message	Model	Enable	Probable Cause	Remedy
P1 Sump Pressure Low	FLOODED	ALWAYS	Sump Pressure Low	Check pressure sensor, wiring and tubing.
				Machine may have failed to start.
T1 Interstage HIgh, T2 Discharge High, T3 Oil Temp HIgh, T4 Intercool High, T5 Discharge High, T1 Discharge High, T2 Dry Side High, T3 Oil Temp High, T4 Interstage High	ALL	ALWAYS	High Temp. Fault	Ambient above 105°F (41°C), improve local ventilation.
	FLOODED	ALWAYS		Fluid level low, replenish to proper level.
				Thermal valve, check operation
	ALL	ALWAYS		Cooler fins dirty, clean fins and fan.
		Water-cooled		Low water flow, check for valve closed, pump off or broken pipe.
		Water-cooled		High water temperature, increase flow or lower water temperature.
		Water-cooled		Cooler plugged, clean tubes and shell, if plugging persists, use cleaner water.
		ALWAYS		Sensor failure, check sensor and wiring.
Power Interruption	ALL	ALWAYS	Motor Starter(s) Not Working	Check starter controls and wiring
			No Contatct to Input D8	Check wiring to input.
			Intermittent Control Power	Check line voltage and connections.
VSD Emergency Stop	ALL	VSD	E-Stop Button Active	Release button.

Table 4-1: Troubleshooting Guide—Supervisor Controller

Message	Model	Enable	Probable Cause	Remedy
VSD Com Fault	ALL	VSD	Communication Error Detected by Drive	Check for intermittent control wiring to drive.
VSD Param Lim Fault	ALL	VSD	Communication Error at Powerup or Setup	Check control wiring to drive.
			Incorrect Factory or VSD Setup	Check setup menus and drive rating.
VSD Drive Fault__	ALL	VSD	Fault Detected by Drive	See *Section 6*.

Table 4-2: Analog Alarms (Flooded Screw Compressors Less Than 200 psi)

Sensor	Type	Limit	Start Delay	Run Delay	Check (*)	Comment
P_1	HIgh Inhibit	5	0	0	At Start	High sump psi at start
P_1	Low Fault	5	0	0	When Running	Immediate Fault
P_1	High Fault	500	0	0	Constantly	Sensor failure fault
P_2	High Fault	500	0	0	Constantly	Sensor failure fault
P_3	High Fault	500	0	0	Constantly	Sensor failure fault
P_4	High Fault	500	0	0	Constantly	Sensor failure fault
T_1	Low Fault	-40	0	0	Constantly	Sensor failure fault
T_1	High Fault	225	5	30	Constantly	Delayed for temp spikes
T_1	High Fault	235	5	30	Constantly	Delayed for temp spikes
T_1	High Fault	245	0	0	Constantly	Immediate Warning
T_1	High Fault	255	0	0	Constantly	Immediate Fault
T_1	High Fault	500	0	0	Constantly	Sensor failure fault
T_2	Low Fault	-40	0	0	Constantly	Sensor failure fault
T_2	High Warn	225	5	30	Constantly	Delayed for temp spikes
T_2	HIgh Fault	235	5	30	Constantly	Delayed for temp spikes
T_3	Low Warn	-40	0	0	Constantly	Sensor failure warning
T_3	High Warn	500	0	0	Constantly	Sensor failure warning
T_4	Low Fault	-40	0	0	Constantly	Sensor failure fault
T_4	HIgh Fault	500	0	0	Constantly	Sensor failure fault

(*) In the ‘Check’ column above, alarms are checked:
Constantly—if machine running or stopped
When Running—if machine is running
If Enabled—if parameter is non-zero
At Start—will not allow start if alarm present
Over Min Psi—machine is loaded and above min load pressure

Table 4-3: Analog Alarms (LS-16T, LS-20T and LS-20TS Compressors)

Sensor	Type	Limit	Start Delay	Run Delay	Check (*)	Comment
P_1	HIgh Inhibit	5	0	0	At Start	High sump psi at start
P_1	Low Fault	5	0	0	When Running	Immediate Fault
P_1	High Fault	500**	0	0	Constantly	Sensor failure fault
P_2	High Fault	500**	0	0	Constantly	Sensor failure fault
P_3	High Fault	500**	0	0	Constantly	Sensor failure fault
P_4	High Fault	500**	0	0	Constantly	Sensor failure fault
T_1	Low Fault	-40	0	0	Constantly	Sensor failure fault
T_1	High Fault	245	5	30	Constantly	Delayed for temp spikes
T_1	High Fault	255	0	0	Constantly	Immediate Fault
T_1	High Fault	255	5	30	Constantly	Delayed for temp spikes
T_1	High Fault	265	0	0	Constantly	Immediate Fault
T_1	High Fault	500	0	0	Constantly	Sensor failure fault
T_2	Low Fault	-40	0	0	Constantly	Sensor failure fault
T_2	High Warn	245	5	30	Constantly	Delayed for temp spikes
T_2	HIgh Warn	255	0	0	Constantly	Immediate Warning
T_2	High Fault	255	5	30	Constantly	Delayed for temp spikes
T_2	High Fault	265	0	0	Constantly	Immediate Fault
T_2	High Fault	500	0	0	Constantly	Sensor failure fault
T_3	Low Warn	-40	0	0	Constantly	Sensor failure warning
T_3	High Warn	500	0	0	Constantly	Sensor failure warning
T_4	Low Fault	-40	0	0	Constantly	Sensor failure fault
T_4	HIgh Warn	245	5	30	Constantly	Delayed for temp spikes
T_4	HIgh Warn	255	0	0	Constantly	Immediate Warning
T_4	HIgh Fault	255	5	30	Constantly	Delayed for temp spikes
T_4	HIgh Fault	255	0	0	Constantly	Immediate Fault
T_4	HIgh Fault	500	0	0	Constantly	Sensor failure fault

(*) In the 'Check' column above, alarms are checked:
Constantly—if machine running or stopped
When Running—if machine is running
If Enabled—if parameter is non-zero
At Start—will not allow start if alarm present
Over Min Psi—machine is loaded and above min load pressure

(**) 750 psi for 750 psi transducers.

Table 4-4: Parameters

Type	Enable	Default	Min	Max	Display Text	Comment
Setup	Always	1	0	2	Press Tran	200,250,500, 750
Setup	X200	135	50	225	P1 Max	250psi transducer
Setup	X250	135	50	195	P1 Max	200psi transducer
Setup	X500	250	150	495	P1 Max	500psi transducer
Setup	X750	400	300	560	P1 Max	750psi transducer
Setup	Always	0	0	1	Water Switch	Water pressure switch enable for water cooled machines
Setup	Flooded	0	0	1	OilSwitch	Oil switch enable for flooded screw machines
Setup	Always	65	20	200	Min Load Psi	Minimum acceptable Loaded P1 value
Setup	Always	0	0	30	Stop Timer	If not 0, run unloaded for this time before stopping
Setup	Always	0	0	30	Lube Cycle	Prelube/Postlube time
Setup	Always	0	0	2	K8 Option	Disable, Lube Pump, Master Control
Setup	Always	0	0	100000	Load Hours	Hours machine has been loaded
Setup	Always	0	0	100000	Run Hours	Hours machine has been running
Setup	Always	0	0	100000	Load Cycles	Number of load cycles
Setup	Always	0	0	100000	Starts	Number of starts
Setup	Always	0	0	10000	Capacity	Used by monitor to determine system load
Cal	Always	0	-7	7	P1	
Cal	Always	0	-7	7	P2	
Cal	Always	-20	10	dP1		
Cal	Always	0	-7	7	P3	
Cal	Always	0	-7	7	P4	
Cal	Always	0	0	1	Fault on Warn	Force shutdown on warning
User	X200	110	30	220	Unload	250psi transducer unload pressure
User	X250	110	30	185	Unload	200psi transducer unload pressure

Table 4-4: Parameters

Type	Enable	Default	Min	Max	Display Text	Comment
User	X500	150	150	360	Unload	500psi transducer unload pressure
User	Always	150	150	560	Unload	750psi transducer unload pressure
User	Always	10	3	70	Load Delta	Differential pressure from unload pressure
User	Always	15	0	59	Unload Time	Auto mode shut down after unloaded for this time
User	Always	0	0	30	Drain Interval	Time between drains (Minutes)
User	Always	0	0	10	Drain Time	Duration of drain (Seconds)
User	Always	0	0	59	Restart Time	Auto restart on power up if not 0 (Seconds)
User	Always	0	0	15	Wye Delta	Wye to delta starter transition time (Seconds)
User	Always	0	0	2	Language	French, German, Italian, Spanish, English
User	Always	0	0	1	Temp Units	Fahrenheit, Celsius
User	Always	0	0	2	Press Units	Pressure units, Psi, Bar, kPa
Seq	Com Mod	0	0	4	Sequence by	Disabled,Com, Hours, Remote, Slave, Time Of Day etc.
Seq	Always	0	0	100000	Seq Hrs	Used for Hours sequencing mode
Seq	Always	1	1	16	Com Number	Communications ID number
Seq	Always	1	1	16	Machines	Number of machines in a system
Seq	Always	70	20	185	Low Press	Panic start next machine in sequence
Seq	Always	10	2	59	Recover Time	Keeps multiple machines from starting at same time (seconds)
Seq	Always	0	0	250	Rotate	Used to force a machine to stop

4.2 MACHINE BEHAVIOR AFTER A POWER OUTAGE

Condition: Machine was in a running or ready condition when power was lost. Table 4-5 describes how a machine behaves after a power up under various conditions if the Restart timer is greater than 0. If the Restart timer is 0 the machine powers up in the Manual Stop state.

The Seq. Mode column pertains to the Sequencing mode parameter. It can be Disabled, set to Remote Start/Stop or to other sequencing modes (Seq). The Local/Remote column refers to the Local/Remote Button on the display panel. The Remote Start/Stop column pertains to the Remote Start/Stop input. The Run Mode column the machine run mode (Auto button on the display panel). Note that this table only applies if the Restart Timer has a value other than zero. If the Restart Timer is zero then the machine always powers up in Manual Stop.

4.3 REMOTE STOP/START INPUT

Table 4-6 describes how a machine reacts to the Remote Start/Stop input. See previous table for column descriptions.

NOTE

the Sequencing Mode parameter must be set to Remote to enable Remote Start/ Stop input.

4.4 BROWN OUT INPUT

Normally not wired by factory, this feature is used to enable the compressor to properly recover from very short-cycle power loss or voltage dips for those installations that are susceptible to this kind of power interruption. The controller alone is not as sensitive to these interruptions as is the switchgear, and must be told that the loss has occurred. A normally closed starter contact wired to the Brownout input (D8) forces the controller into a standby state if the starter drops out. The controller will then re-engage the starter after normal start permissives are satisfied.

Table 4-5: Machine Power Outage Behavior

Seq. Mode	Local/ Remote	Remote Start/ Stop	Run Mode	Action (State)
Disabled	xxxx	xxxx	Cont	Manual Stop
Disabled	xxxx	xxxx	Auto	Start after Restart delay & P2 < Load psi, & P1 < 5 psig
Remote	Local	xxxx	Cont	Manual Stop
Remote	Local	xxxx	Auto	Start after Restart delay & P2 < Load psi, & P1 < 5 psig
Remote	Remote	Off	Cont	Remote Stop
Remote	Remote	Off	Auto	Remote Stop
Remote	Remote	On	Cont	Start after Restart delay
Remote	Remote	On	Auto	Start after Restart delay & P2 < Load psi, & P1 < 5 psig
Note: ‘xxxx’ means ‘has no effect’.				

Table 4-6: Remote Start/Stop Input

Local/Remote	Remote Start/Stop	Run Mode	Action (State)
Local	xxxx	Cont	Normal Cont Operation
Local	xxxx	Auto	Normal Auto Operation
Remote	Off	Cont	Remote Stop
Remote	Off	Auto	Remote Stop
Remote	On	Cont	Start if stopped
Remote	On	Auto	Normal Auto Operation

NOTES

Section 5

WIRING DIAGRAMS

Figure 5-1: WIRING DIAGRAM—SUPERVISOR COMMUNICATION MODULE

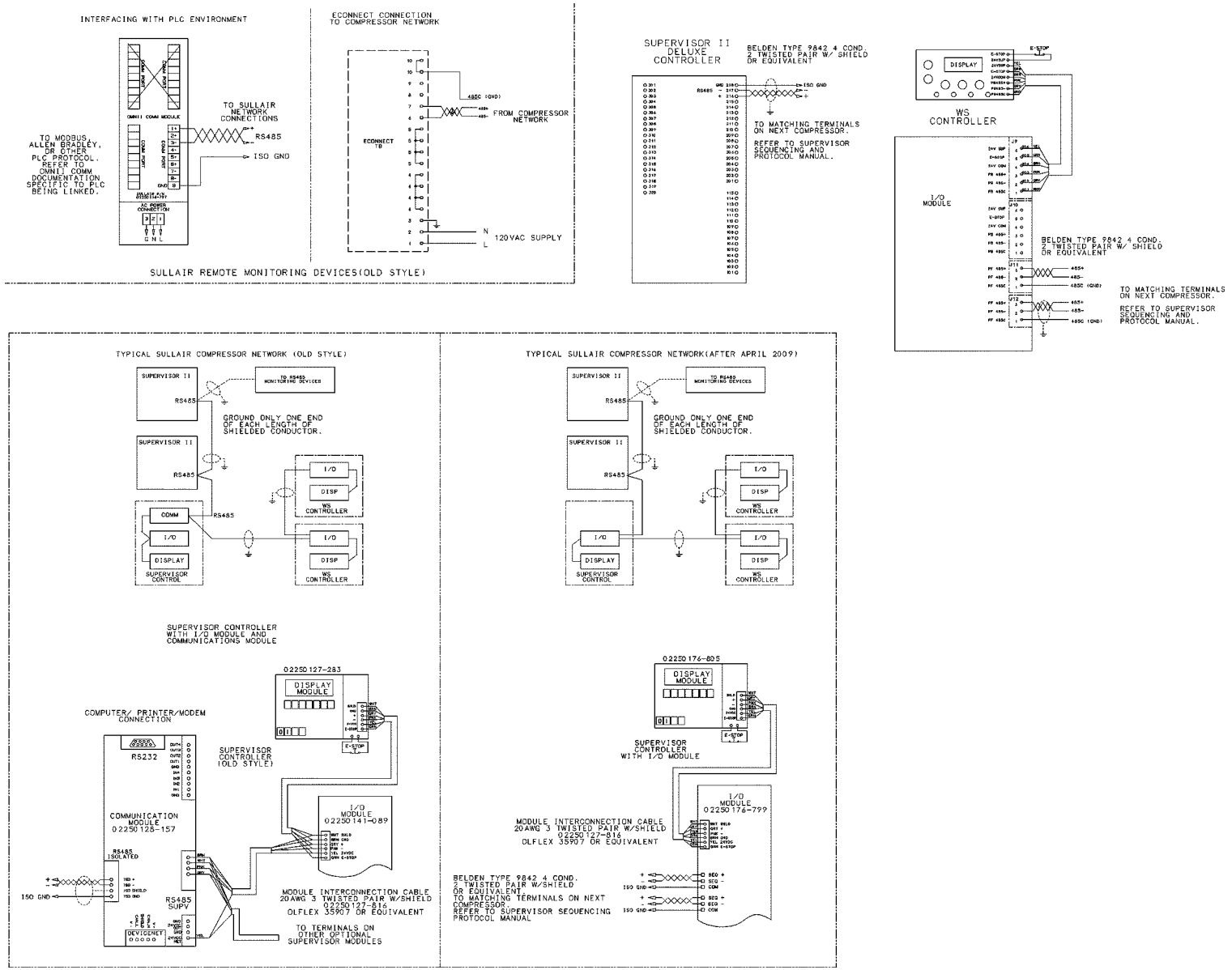

Figure 5-2: WIRING DIAGRAM—SUPERVISOR CONTROL Prior to April, 2009

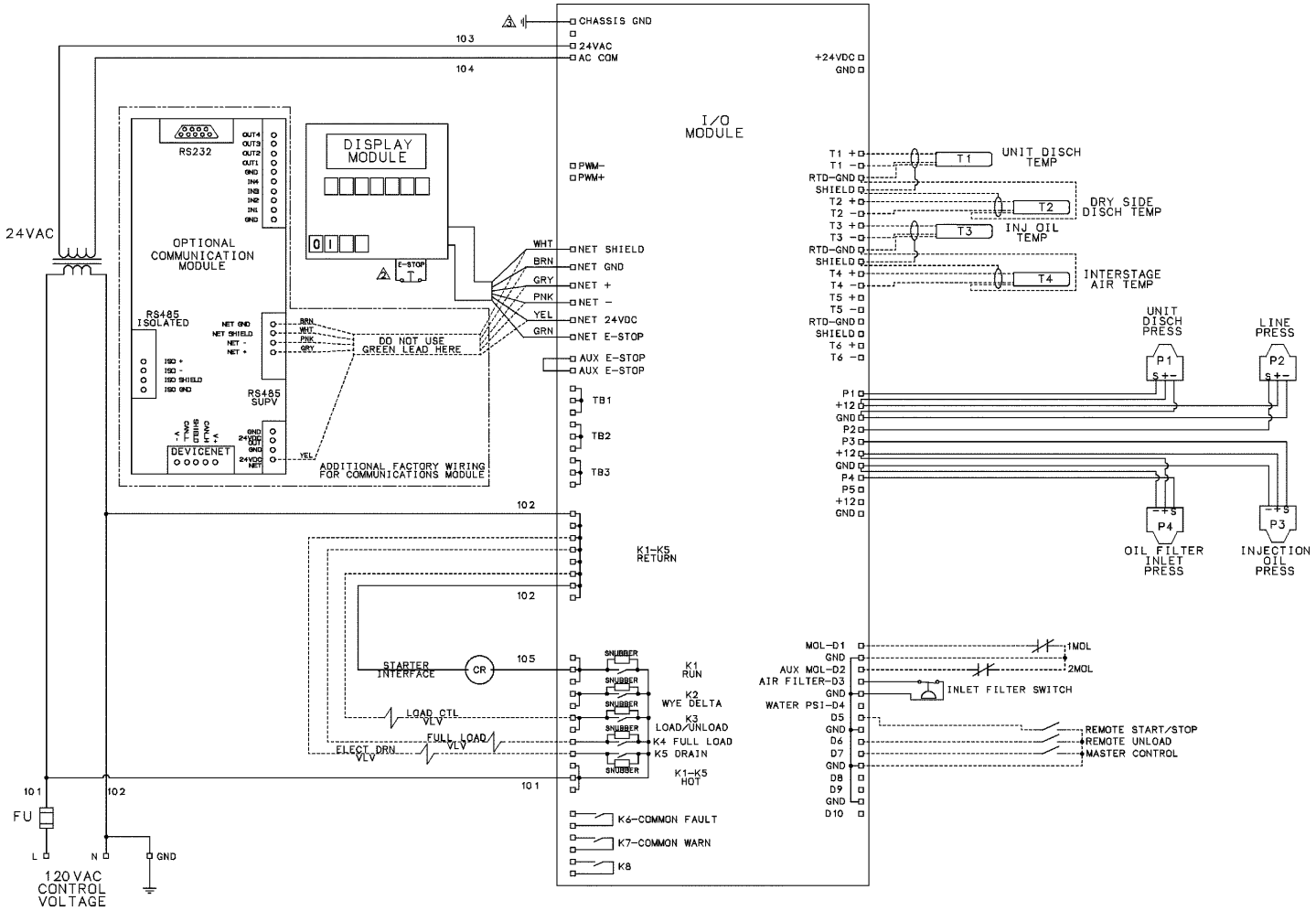

NOTES

1. DASHED LINES INDICATE TYPICAL FIELD CONNECTIONS THAT VARY DEPENDING ON COMPRESSOR BEING RETROFITTED AND IS FIELD WIRED. FACTORY WIRING IS SOLID.
2. DISPLAY E-STOP CONNECTION IS WIRED TO TERMINAL BLOCK INSIDE REAR COVER OF DISPLAY.
3. CHASSIS GROUND WIRE TO BE AS SHORT AS POSSIBLE

Figure 5-3: WIRING DIAGRAM—SUPERVISOR CONTROL After April, 2009

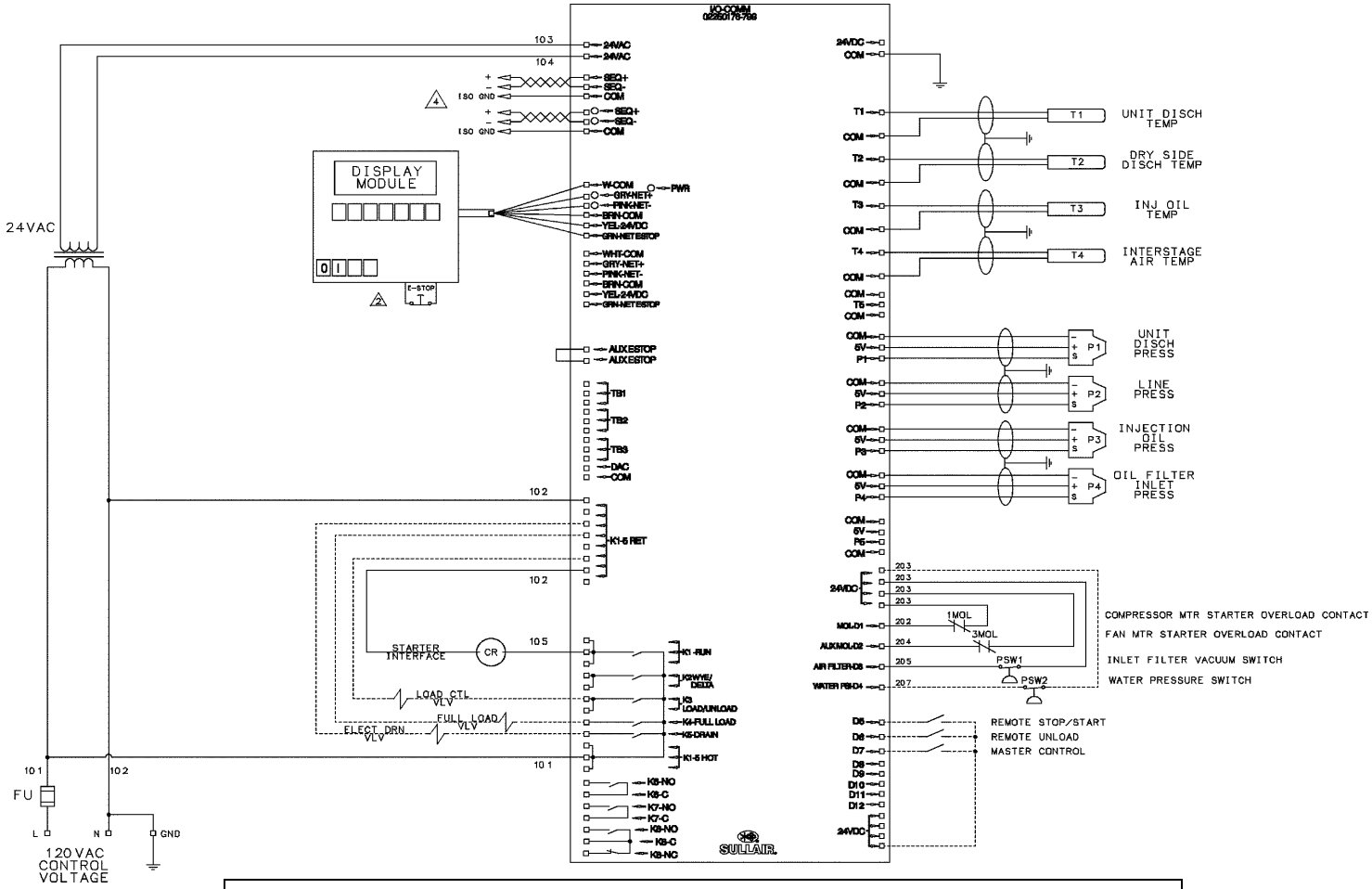

NOTES

1. DASHED LINES INDICATE TYPICAL FIELD CONNECTIONS THAT VARY DEPENDING ON COMPRESSOR BEING RETROFITTED AND IS FIELD WIRED. FACTORY WIRING IS SOLID.
2. DISPLAY E-STOP CONNECTION IS WIRED TO TERMINAL BLOCK INSIDE REAR COVER OF DISPLAY.
3. CHASSIS GROUND WIRE TO BE AS SHORT AS POSSIBLE
4. BELDEN TYPE 9842 4 COND. 2 TWISTED PAIR W/SHIELD OR EQUIVALENT. TO MATCHING TERMINALS ON NEXT COMPRESSOR. REFER TO SUPERVISOR SEQUENCING PROTOCOL MANUAL.

Section 6

VARIABLE SPEED DRIVE

6.1 SAFETY

The following special instructions apply to VSD packages provided with electronic adjustable speed motor drives. These are in addition to other warnings and cautions.

WARNING

Ground the unit following the instructions in this manual. Ungrounded units may cause electric shock and/or fire. The variable speed drive has a large capacitive leakage current during operation, which can cause enclosure parts to be above ground potential. Proper grounding, as described in this manual, is required. Fai ure to observe this precaution could result in death or severe injury.

WARNING

Before applying power to the variable speed drive, make sure that the front and cable covers are closed and fastened to prevent exposure to potential electrical fault conditions. Failure to observe this precaution could result in death or severe injury.

WARNING

Refer all drive service to trained technicians. This equipment should be installed, adjusted, and serviced by qualified electrical maintenance personnel familiar with the construction and operation of this type of equipment and the hazards involved and in accordance with published service manuals. Failure to observe this precaution could result in death or severe injury.

WARNING

Line terminals (L1, L2, L3), motor terminals (U, V, W) and the DClink/brake resistor terminals (-/+) are live when the drive is connected to power, even if the motor is not running. Contact with this voltage is extremely dangerous and may cause death or severe injury.

⚠ WARNING

Before opening the variable speed drive covers:

- **Disconnect all power to the variable speed drive.**
- **Wait a minimum of 5 (five) minutes after all the lights on the keypad are off. This allows time for the DC bus capacitors to discharge.**
- **A hazard voltage may still remain in the DC bus capacitors even if the power has been turned off. Confirm that the capacitors have fully discharged by measuring their voltage using a multimeter set to measure DC voltage. Failure to follow the above precautions may cause death or severe injury.**

⚠ CAUTION

Do not perform any meggar or voltage withstand tests on any part of the variable speed drive or its components. Improper testing may result in damage. Prior to any tests or me surements of the motor or the motor cable, disconnect the motor cable at the variable speed drive output terminals (U, V, W) to avoid damaging the variable speed drive during motor or cable testing.

⚠ CAUTION

Do not touch any components on the circuit boards. Static voltage discharge may damage the components.

⚠ CAUTION

Install the variable speed drive in a well-ventilated room that is not subject to temperature extremes, high humidity, or condensation, and avoid locations that are directly exposed to sunlight, or have high concentrations of dust, corrosive gas, explosive gas, inflammable gas, grinding fluid mist, etc. Improper install tion may result in a fire hazard.

⚠ CAUTION

Make sure that no power correction capacitors are connected to the variable speed drive output or the motor terminals to prevent variable speed drive malfunction and potential damage.

⚠ CAUTION

Make sure that the variable speed drive output terminals (U, V, W) are not connected to the utility line power as severe damage to the variable speed drive may occur.

6.2 OVERVIEW

The Sullair VSD drive application is custom designed for operation of air compressors. All necessary control functions are performed through the Supervisor keypad. The drive functions as a module on the Supervisor communications bus.

Relevant drive status data and compressor performance are presented on the Supervisor display. Its keypad provides simple setup and adjustment of necessary drive parameters. Drive controls are coordinated with internal compressor controls, and with other Supervisor compressors in sequenced systems. The Supervisor monitors drive performance to provide motor thermal and other protections in an easy-to-use, robust design.

Table 6-1: Conductor and Fuse Sizes (380/460V)

HP	Size (A)	Fuse (A)	Wire Size Power (75°C Rated Wire)	Wire Size Ground	Wire Size Power (90°C Rated Wire)	Wire Size Ground
15	23	30	10	10	10	10
20	31	35	8	8	8	8
25	38	50	6	8	8	8
30	46	60	4	8	6	8
40	61	80	2	6	2	6
50	72	100	2	6	2	6
60	87	110	1	6	2	6
75	105	125	1/0	4	1	6
100	140	175	3/0	2	2/0	2
125	170	200	4/0	1/0	4/0	1/0
150	205	250	300	2/0	4/0	1/0
200	261	350	2x4/0	3/0	2x2/0	2/0
250	385	400	2x250	300	2x3/0	3/0
300	385	450	2x250	300	2x250	300
350	460	500	2x300	300	2x300	300
400	520	600	2x400	350	2x350	300
450	590	6x350	2x500	500	2x400	400

Table 6-2: Conductor and Fuse Sizes (575V)

HP	Size (A)	Fuse (A)	Wire Size Power (75°C Rated Wire)	Wire Size Ground	Wire Size Power (90°C Rated Wire)	Wire Size Ground
15	18	30	10	10	10	10
20	27	40	8	8	8	8
25	34	45	6	8	8	8
30	34	45	6	8	8	8
40	52	70	4	6	4	6
50	62	80	2	6	2	6
60	80	125	1/0	6	1	6
75	100	150	2/0	6	1/0	6
100	125	175	3/0	6	2/0	2
125	144	250	300	1/0	4/0	1/0
150	170	250	350	2/0	300	1/0
200	208	275	350	2/0	300	1/0
250	261	350	2x4/0	3/0	2x2/0	2/0
300	325	400	2x250	300	2x250	300
350	385	450	2x300	300	2x300	300
400	460	6x250	2x300	300	2x300	300
450	460	6x250	2x300	300	2x300	300

**UL Recognized Type RK*
**Use only copper wire with minimum temperature rating of 75*C*
**Based on Maximum environment of 104*F (40*C)*
**Refer to NEC Ariticle 310 for Proper Conductor Size Requirements*

6.3 INSTALLATION

This variable speed AC drive has been properly mounted, adjusted, and tested prior to shipment of the compressor package. Inspect the unit to ensure it was not damaged during shipment. The package provides a terminal block for connection of threephase power and ground. Refer to the package wiring diagram for specific connection information. All internal wiring to the drive and motors has been provided by the factory, in accordance with the drive's requirements. Do not alter factory wiring. To ensure proper wiring to the package, use the following guidelines:

- Use heat-resistant copper cables only, +75°C or higher.
- The minimum input line cable and line fuses must be sized in accordance with the rated input current of the unit. See *Table 6-1*.
- Consistent with UL listing requirements, for maximum protection of the variable speed drive, use UL recognized fuses, type RK5.
- Suitable for circuits delivering fault currents up to 100,000A.

6.4 SUPERVISOR DISPLAY AND MENUS

Refer to *Section 2* for a general description of the Supervisor and its displays and adjustments. This section addresses special functions applicable to VSD packages.

6.4.1 VSD STATUS

This group of displays shows the performance of the variable speed compressor package. The following may be used for evaluation of system performance. The first four lines indicate real-time conditions:

Capacity—Delivery in CFM.

Capacity %—Percent of full package capacity.

Power—Total package power in KW.

Power %—Percent of power at full capacity. The next eight lines indicate recent longer-term performance. See *Section 6.4.2* for reset procedure. Capacity—Average delivery in CFM.

Capacity %—Average percent of full package capacity.

Power—Average total package power in KW.

Power %—Average percent of power at full capacity.

KCF—Running total of air delivered in thousands of cubic feet.

KWH—Running total of energy used in kilowatthours.

Cost—Running total of cost of operation.

Savings—Estimated savings compared to other control methods.

The next eight lines indicate long-term performance during the entire life of the compressor.

Capacity—Average delivery in CFM.

Capacity %—Average percent of full package capacity.

Power—Average total package power in KW.

Power %—Average percent of power at full capacity.

KCF—Running total of air delivered in thousands of cubic feet. KWH—Running total of energy used in kilowatthours.

Cost—Running total of cost of operation.

Savings—Estimated savings compared to other control methods.

The last five lines indicate real-time control system parameters for service evaluation.

P2—System pressure.

Motor RPM—Motor speed.

Frequency—Output frequency of the drive in Hertz.

Drive Temp—Internal temperature of the drive.

Motor Prot—Estimated percentage of motor temperature rise.

6.4.2 VSD CONTROL PARAMETERS

The following adjustments apply specifically to VSD packages.

Setpoint—The targeted pressure for the variable speed controls. This is normally adjusted near the bottom of the load/unload band above. The speed will be adjusted to maintain this pressure. Most packages will allow adjustment of this over a wide range, to allow tailoring to the needs of the application. Adjustments will be automatically made to the maximum speed to operate the motor at its full capacity at any pressure.

Cost/KWH—The cost per kilowatt-hour of energy is entered here, for use in cost estimates in the VSD

Status displays. For example, enter 0.070 for 7 cents per KWH.

Saving vs—The basis for savings estimates. The cost of VSD operation can be compared to Inlet modulation, Load/Unload, or variable displacement (spiral valve) control systems.

Reset Load Est.—This resets the "Recent Usage" values to zero in the VSD Status calculations. This functions similarly to a trip odometer in a car.

6.4.3 VSD CALIBRATION

Two additional calibration adjustments are provided in VSD. These can be used to fine tune nominal values used in VSD Status displays. Each is adjustable from 0 to 200% of nominal.

Cap—for adjustment of delivery values. This may be used for adjustment to actual conditions, or for display in other units of measure.

KW—This may be used for adjustment to calibrated meters under actual operating conditions.

6.4.4 VSD FACTORY SETUP

Factory adjustments are generally the same as conventional packages, with a few additions.

Model—The features in this section apply only to V120, V160, V200, V200S, V200TS and V320TS models. These packages are designed specifically for integrated drive control. This model selection will affect the choices available in the VSD Setup group.

Capacity—This number will be adjusted, along with maximum speed, whenever a change is made to the setpoint pressure. Spiral Valve—This should be set as appropriate for the package. The spiral valve will be closed for highest efficiency at all moderate to heavy demands. The valve will be opened for light demands.

VSD—The descriptions in this section apply only to packages with integrated drive controls operating in serial communications with the Supervisor.

6.4.5 VSD SETUP

This group of adjustments sets up the parameters of the drive for the construction of the compressor package. These may be viewed at any time, but are protected by the password in the Factory Setup group.

VSD Auto-Set—This should be set to "Yes" for all normal applications. This performs automatic adjustment of several parameters based on operating conditions and user adjustments.

Nominal HP—The nameplate horsepower of the main drive motor.

Nominal Volts—The compressor package rated nominal voltage

VSD Max Amps—The rated maximum current of the drive

Motor FLA—The motor's rated full load amps at nominal HP(I)

Motor SF—The motor's nameplate service factor

Motor V—The motor's rated voltage(I)

Motor Hz—the motor's nameplate frequency

Motor RPM—the motor's nameplate full-load speed

(I)Some package designs employ motors connected for voltages lower (and FLA higher) than the nominal voltage of the package, for improved performance.

6.5 STARTUP OF NEW COMPRESSOR PACKAGE

1. Read and follow all safety warnings and cautions in this manual.
2. At installation ensure:
   - That the incoming power and ground wires are properly connected to terminal blocks in the electrical control box.
   - Visually check all power and controls connections to the drive to ensure that no damage has occurred.
3. Check that moisture has not condensed inside the variable speed drive.
4. Connect to the utility and switch the power on. The Supervisor will establish communications and report errors if correct conditions are not found. If replacing a drive, communication faults will be indicated for either improper communication wiring or improper application or communication software in the drive.
5. To check rotation, quickly press first the Start | then the Stop ○ key on the Supervisor. Compressor rotation is factory set. If the fan rotates incorrectly, disconnect power and simply interchange two of the fan motor leads at the fan starter.

6.6 FAULT AND WARNING CODES

The Supervisor constantly monitors drive performance through the serial channel. The following messages are specifically displayed by the Supervisor in the event of problems.

Fault	Possible Cause	Solution
VSD Param Lim Fault	Incorrect model, HP or Voltage selected in Factory & VSD Setup	Make proper selections
VSD Com Error	Communications lost with the VSD	Check connections to the VSD. Check VSD control power and check for board faults.
VSD Emergency Stop (VSD Code 51)	Emergency Stop is pressed Break in Estop wiring	Clear the package emergency stop. Check Estop wiring to the drive input.
VSD Com Fault (VSD code 53)	Communications problems detected reported by the VSD	Check connections to the VSD. Check VSD control power and check for board faults.
Drive Fault xx	Problem reported by the VSD	Refer to fault codes in table below

Drive fault codes are used for least-likely faults. The Supervisor will display these as "Drive Fault" with a code number. If a keypad service tool is plugged into the drive, it will display the fault code and the fault name shown in the first two columns.

Code	Fault	Possible Cause	Solution
1	Overcurrent	The variable speed drive has detected a high current (>4xIn) in its output due to: • sudden heavy load increase • short in the motor • short in the cables to the motor • unsuitable motor	Check loading. Check motor. Check cables.
2	Overvoltage	The DC-link voltage has exceeded its high limit due to: • too short a deceleration time • high voltage levels or surges in the utility supply	Make the deceleration time longer. Use a chopper and brake resistor. Correct utility supply voltage (level is too high). Add input impedance to limit surges.
3	Ground Fault (Earth Fault)	Current sensing indicates that the sum of motor phase currents is not zero. • insulation failure in motor or motor cables	Remove faults from ungrounded systems. Check the motor and motor cables.
5	Charging Switch	The charging switch was open when the START command was been given due to: • faulty operation • component failure	Reset the fault and restart. Should the fault re-occur, contact Sullair service

Code	Fault	Possible Cause	Solution
6	Emergency stop	An Emergency stop signal was received from one of the digital inputs	Determine the reason for the Emergency stop and remedy it.
7	Saturation trip	• defective component • motor or motor cable short	Cannot be reset from the keypad. Switch off power. If this fault appears simultaneously with Fault 1, check the motor and motor cables. IF THE PROBLEM IS NOT IN THE MOTOR OR ITS CABLES, DO NOT RE-CONNECT POWER! Contact Sullair service.
8	System fault	• component failure • faulty operation Note: exceptional fault data record, see the Active Fault Menu and Fault Time Data Record for more information	Reset the fault and restart. Should the fault reoccur, contact Sullair service.
9	Undervoltage	DC-link voltage is less than the minimum safe operating voltage limit. • most probable cause: too low a supply voltage • variable speed drive internal fault	If there was a supply voltage loss or dip, reset the fault and restart the variable speed drive. Check the supply voltage. If it was within specification at the time of the fault, an internal failure has occurred. Contact Sullair service.
10	Input line supervision	Input line phase is low or missing.	Check the utility supply voltage, cables and connections.
11	Output line supervision	Current sensing indicates that there is no current in one motor phase.	Check the motor cables, connections and motor.
13	Undertemperature	Heatsink temperature is under 14°F(-10°C)	Provide supplemental heating or relocate the variable speed drive to a warmer location.
14	Over-temperature	Heatsink temperature is over 194°F(90°C).	An overtemperature warning is issued when the heat sink temperature exceeds 185°F (85°C), a fault occurs at 194°F (90°C). Check for the correct amount and unrestricted flow of cooling air. Check the heatsink for dust or dirt buildup. Check the highest ambient temperature level. Make sure that the switching frequency is not set too high in relation to ambient temperature and motor load.
15	Motor stalled	• motor or load mechanical failure • load is too high • stall parameter settings incorrect	Check motor, mechanical system and load level. Confirm the stall parameter settings

Code	Fault	Possible Cause	Solution
16	Motor over-temperature	• motor is overloaded • motor overheating has been detected by the variable speed drive motor temperature model	Decrease the motor load. If no motor overload exists, check the temperature model parameters
22	EEPROM checksum fault	Parameter save fault • faulty operation • component failure	Upon reset of this fault, the variable speed drive will automatically reload the parameter default settings. Check all parameter settings after reset. If the fault reoccurs, contact Sullair service
24	Counter fault	Values displayed on the counters are incorrect	
25	Microprocessor watchdog fault	• faulty operation • component failure	Reset the fault and restart. Should the fault reoccur, contact Sullair service.
26	Startup prevented	Startup of the drive has been prevented.	Check Start Enable/Interlock settings.
31	IGBT temperature (hardware)	IGBT Inverter Bridge overtemperature protection has detected a high short-term overload current	Check loading. Check motor size.
32	Fan cooling	The variable speed drive cooling fan did not start when commanded	Contact Sullair service.
36	Control Unit	The control unit cannot control the power unit and vice-versa	Change the control unit.
37	Device change (same type)	• option board changed • different power rating of drive	Reset. Note: No Fault Time Data Record is made
38	Device added (same type)	• option board added • drive of different power rating added	Reset. Note: No Fault Time Data Record is made
39	Device removed	• option board removed • drive removed	Reset. Note: No Fault Time Data Record is made.
40	Device unknown	Unknown option board or drive	Contact Sullair service
41	IGBT temperature	IGBT Inverter Bridge overtemperature protection has detected a high short-term overload current	Check loading. Check motor size.
44	Device change (different type)	• option board changed • different power rating of drive	Reset. Note: No Fault Time Data Record is made. Note: Application parameter values restored to default.

Code	Fault	Possible Cause	Solution
45	Device added (different type)	• option board added • drive of different power rating added	Reset. Note: No Fault Time Data Record is made. Note: Application parameter values restored to default.
50	Analog input Iin < 4 mA	Current at the analog input is< 4 mA.	Adjust parameter 2.6.1 to "None".
51	External fault	Digital input set as an external fault input has been triggered	Clear the package emergency stop Check Estop wiring to the drive input
53	Communication bus fault	The data connection between the communication bus master and the communication bus board has failed	Check Supervisor bus cable. Set Supervisor VSD to "Serial". If installation is correct contact Sullair service.
54	Slot fault	Defective option board or slot	Check that the board is properly installed and seated in slot. If the installation is correct, contact Sullair service.

Variable Speed Drives (VSDs) require preventative maintenance just like any other industrial electrical device. There are many different manufacturers and sellers of VSDs, but all have the same basic maintenance needs.

Here are some recommendations that will help achieve the longest possible service from your Sullair VSD.

6.7 COMMISSIONING YOUR VSD:

- Record all Supervisor Controller / VSD Set Up parameters for later reference.
- Perform a close visual inspection of the internal components of the unit, looking for obvious loose connections (see torque spec) or hidden shipping damage.
- Ensure the installation and pre-power checks have been performed in accordance with the VSD Preventative Maintenance instruction manual.
- Record line voltage, full load current, operating speed of the motor, and drive temp information for later reference.

6.8 AFTER THE FIRST 48 HRS OF OPERATION:

- Remove the unit from service and using all proper safety precautions inspect for the following:
- All power connections for tightness. (See torque spec)
- Over-all visual inspection for any signs of extreme overheating or stressed components.

6.9 EVERY SIX MONTHS

• While the VSD is operating, measure and compare the operating temperatures to those previously recorded from the Supervisor Controller VSD Status/ Drive Temp.

- Following all proper safety precautions, check or perform the following:

1. Using clean dry compressed air to clean the unit of all dust and debris.
2. Check all connectors and connections for tightness. (See torque spec)
3. General visual inspection for visible signs of overheating or component stress.
4. Clean and check all cooling fans for proper operation. (See section 1-23 for the size of VSD for your unit and procedure.)

6.10 EVERY TWELVE MONTHS:

- In addition to the six month inspection:
- Clean VSD heat sink.
- Inspect all incoming and out going wires for loose of overheated connections.

These are the basic checks that should be performed to be able to spot any impending problems before they occur. The most important aspect in VSD longevity is to keep it clean and maintain tight electrical connections.

If you have any other questions regarding this VSD maintenance needs contact Sullair Technical Assistance at: 1-800 Sullair.

6.11 CLEANING VSD HEAT SINKS

Always read the safety section in your manual for your machine. Properly lock out/tag out the machine before work begins on Frames 4 - 10. VSD Drives can store a capacitive charge. Failure to follow correct shutdown and lockout/tag out procedure can result in serious injury or death.

FAN REMOVAL AND REPLACEMENT 1-15 HP/480V:

1. Remove front cover of VSD.
2. 2. Remove incoming power lead, motor leads, and communication wire to VSD.
3. You will need to remove the VSD from unit. It will either be flange mounted or bolted to the panel. Remove the drive and set it on the back.
4. Remove the fan by taking a screw driver and pushing in on the two side tabs then pull up. The fan needs to be removed with caution so the electrical connections are not damaged.
5. Clean the fan of dirt and debris or install a new fan assembly.

HEAT SINK CLEANING 1-15 HP/480V:

1. If necessary, remove VSD from machine.
2. Remove the screws that hold the back cover on. This will give you the area that the heat sinks and DC Bus capacitors are in.
3. Using clean dry air only blow out this area. Be sure to not allow any debris to enter the VSD.
4. Reinstall the rear VSD cover and screws.
5. Reinstall the VSD on the machine.

FAN REMOVAL AND REPLACEMENT 20-40 HP/480V:

1. Remove front cover of VSD.
2. Remove incoming power lead, motor leads, and communication wire to VSD.
3. You will need to remove the VSD from unit. It will either be flange mounted or bolted to panel. Remove the drive and set on its back.
4. Remove the fan by unscrewing the four mounting screws.
5. Remove the blue control box on the front of the VSD and the metal cover underneath it. Be sure to not allow any debris to enter VSD.
6. Unplug the fan connector and push the wire though the hole in VSD. Remember the fan is on x17 connection
7. Remove the fan from the VSD.

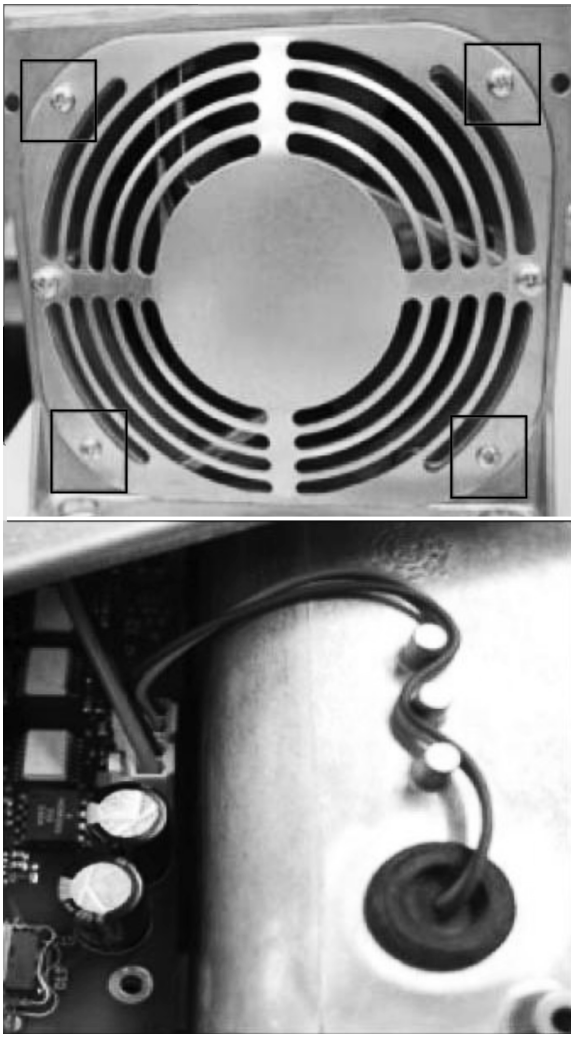

HEAT SINK CLEANING 20-40 HP/480V:

1. If necessary remove VFD from machine.
2. Remove the screws that hold the back cover on. This will give you the area that the heat sinks and DC Bus capacitors are in.
3. Using clean dry air only blow out this area. Be sure to not allow any debris to enter the VSD.
4. Reinstall the rear VSD cover and screws.
5. Reinstall the VSD on the machine if necessary.

FAN REMOVAL AND REPLACEMENT 50-60HP/480V:

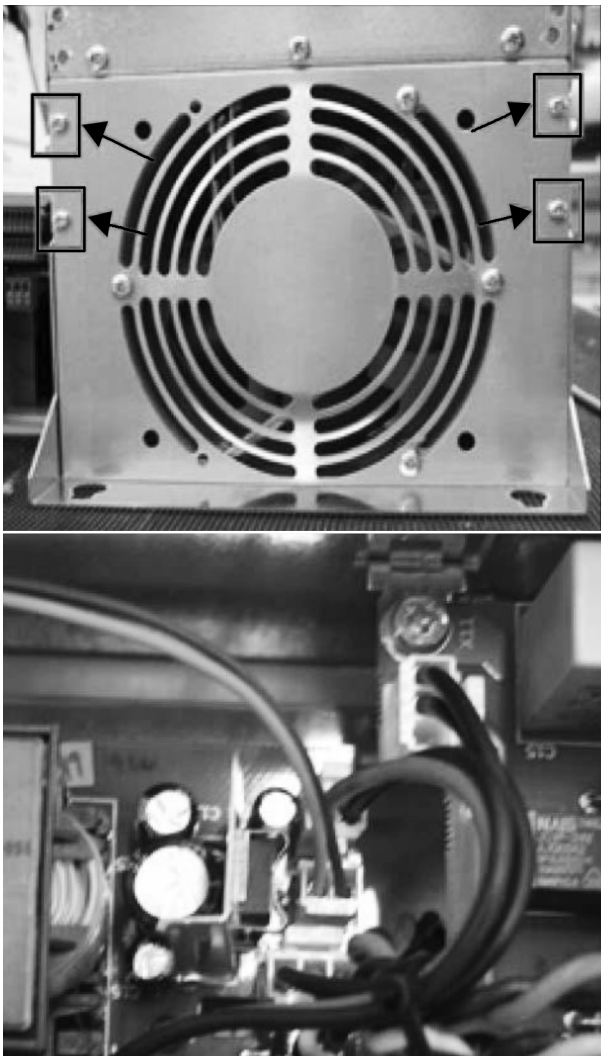

1. Remove front cover of VSD.
2. Remove incoming power lead, motor leads, and communication wire to VSD.
3. You will need to remove the VSD from unit. It will either be flange mounted or bolted to panel. Remove the drive and set on its back.
4. Remove the fan by unscrewing the four mounting screws.
5. Remove the blue control box on the front of the VSD and the metal cover underneath it. *(Be sure to not allow any debris to enter VSD.)*
6. Unplug the fan connector and push the wire though the hole in VSD.
7. Unplug the fan from pin X2 and remove fan from VSD.

HEAT SINK CLEANING 50-60HP/480V:

1. Remove VSD from machine.
2. Remove fan. This will give you the area that the heat sinks and DC Bus capacitors are in.
3. Using clean dry air only blow out this area. Be sure to not allow any debris to enter VSD.
4. Reinstall the fan.
5. Reinstall the VSD on the machine

FAN REMOVAL AND REPLACEMENT 75HP-125HP/480V:

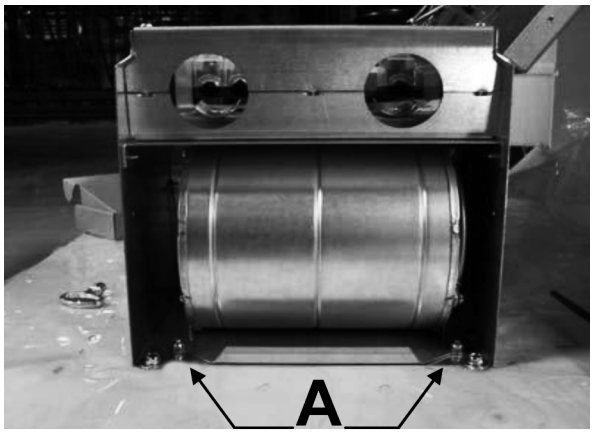

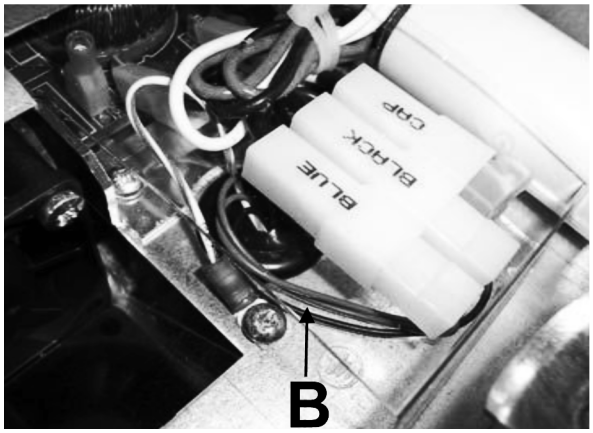

1. Remove front cover and use key to open inner cover of VSD.
2. Remove incoming power lead, motor leads, and communication wire to VSD.
3. You will need to remove the VSD from unit. It will either be flange mounted or bolted to panel.
4. Remove the drive in a safe manner and set on its back.
5. Loosen the two nuts (A) at the bottom of the fan and then pull the fan toward you for removal. Caution the fan cable is still connected. (Be sure to not allow any debris to enter VSD.)
6. Unplug the black, blue, brown and ground fan connectors from the VSD (B).
7. Push the wires though the hole in VSD.

HEAT SINK CLEANING 75HP-125HP/480V:

1. Remove VSD from machine.
2. Remove fan. This will give you the area that the heat sinks and DC Bus capacitors are in.
3. Using clean dry air only blow out this area. Be sure to not allow any debris to enter VSD.
4. Reinstall the fan.
5. Reinstall the VSD on the machine.

FAN REMOVAL AND REPLACEMENT 150HP – 200HP/480V, FRAME 9:

1. Remove front cover of VSD.
2. Remove incoming power lead, motor leads, and communication wire to VSD.
3. You will need to remove the VSD from unit. It with either be flange mounted or bolted to panel. Remove the drive and set on its back.
4. Unplug fan on the bottom of VSD marked 1 in the picture below.
5. Remove the four rubber grommets marked (2) in the picture below. In each hole back out the fan cover screw ¼ inch. Don't remove the screws from the holes.
6. Remove the four fan mounting screws (3) in the picture below.
7. Slide the fan out of the VSD. The fan should come out free from obstruction. If not, the four screws (2) on the fan cover need to be backed out a little more.

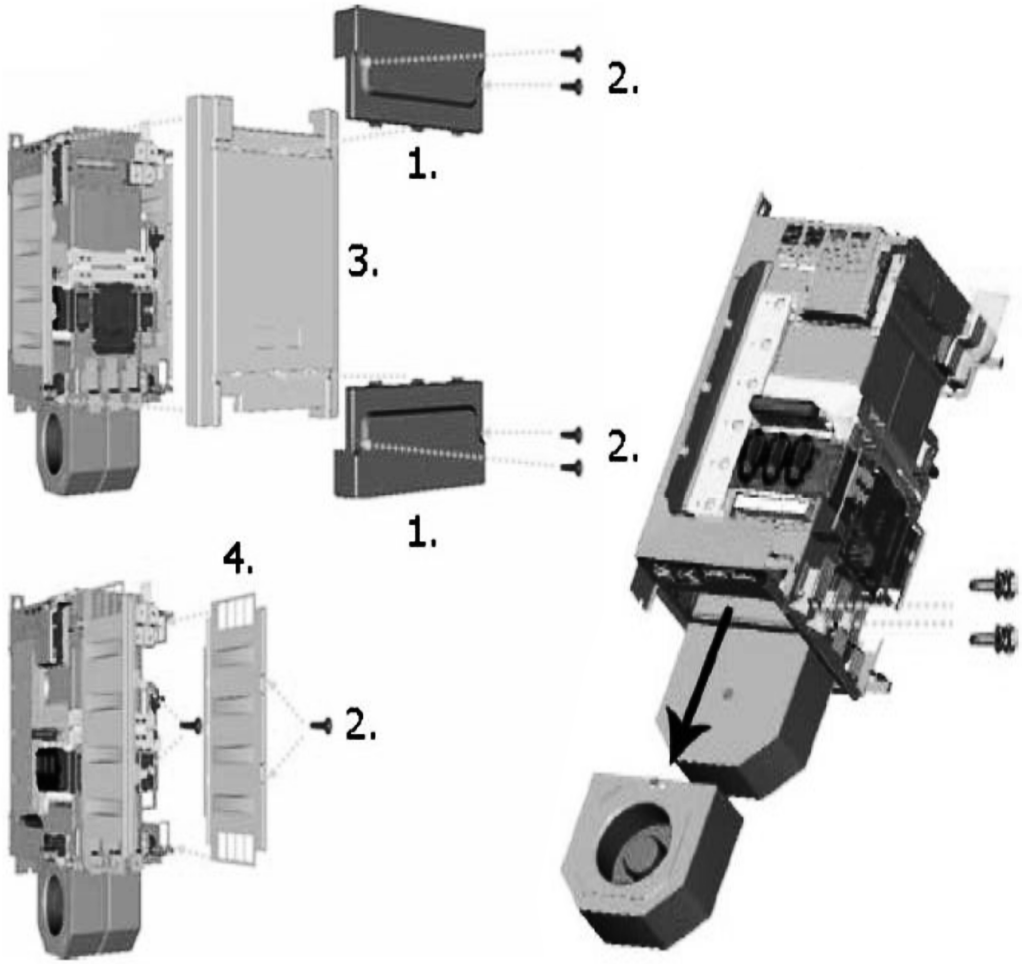

FAN REMOVAL AND REPLACEMENT 150HP – 200HP/480V, FRAME 10:

1. Remove top plate (1) and the control box mounting plate (2)front (1,3) of VSD box. See pictures at right.
2. Remove the front covers (1,3) and side covers (2). See pictures at right.
3. Remove incoming power lead, motor leads, and communication wire to VSD.
4. In order to remove fan from VSD. Remove the two front screws from each fan in the picture below. Caution the fan cable is still connected.

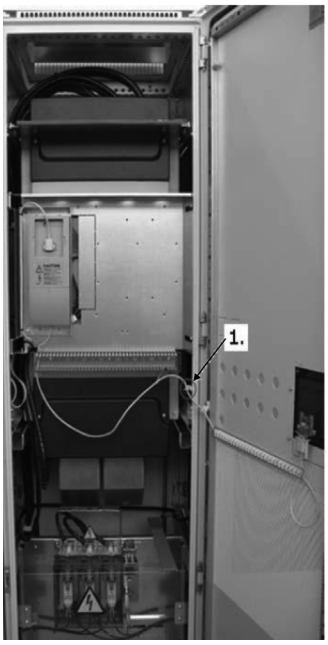

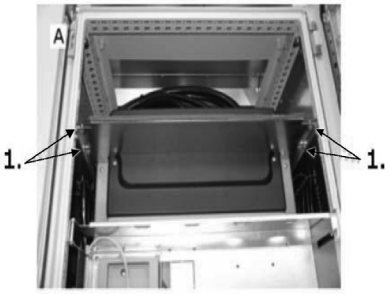

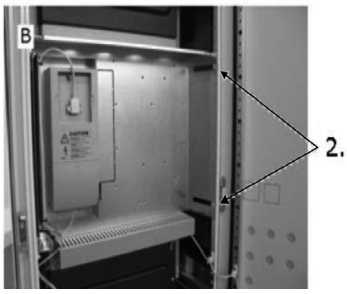

HEAT SINK CLEANING 150HP - 200HP/480V, FRAMES 9-10:

1. 1. With the fan removed using clean dry air only, blow out the heat sink from the top of the VSD.
2. 2. Be sure to not allow debris to enter VSD.

6.12 CLEANING VSD HEAT SINK FILTERS

If the machine is equipped with a VSD filter, it will require maintenance as needed in order to keep the VSD running at optimal temperatures. Below are instructions on how to care for the VSD filter.

VSD Filter Cleaning

1. Locate the VSD filter from the following figures.
2. Remove the filter from the assembly. (The filters are magnetic and should pull off easily.)
3. With a water hose, spray the filter from the magnet side.
4. Let the filter thoroughly dry.
5. Replace filter on the VSD assembly.

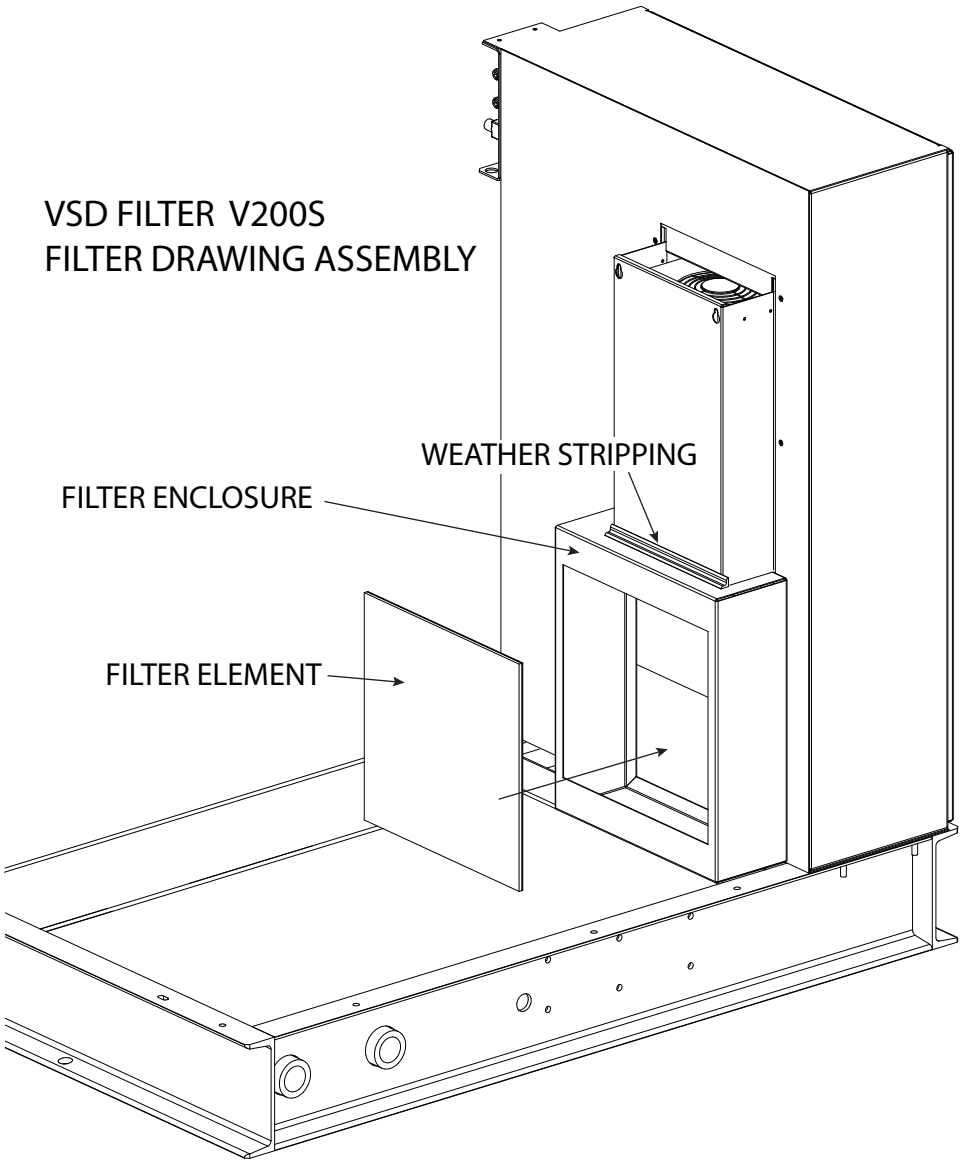

Figure 6-1: V200S SZ8

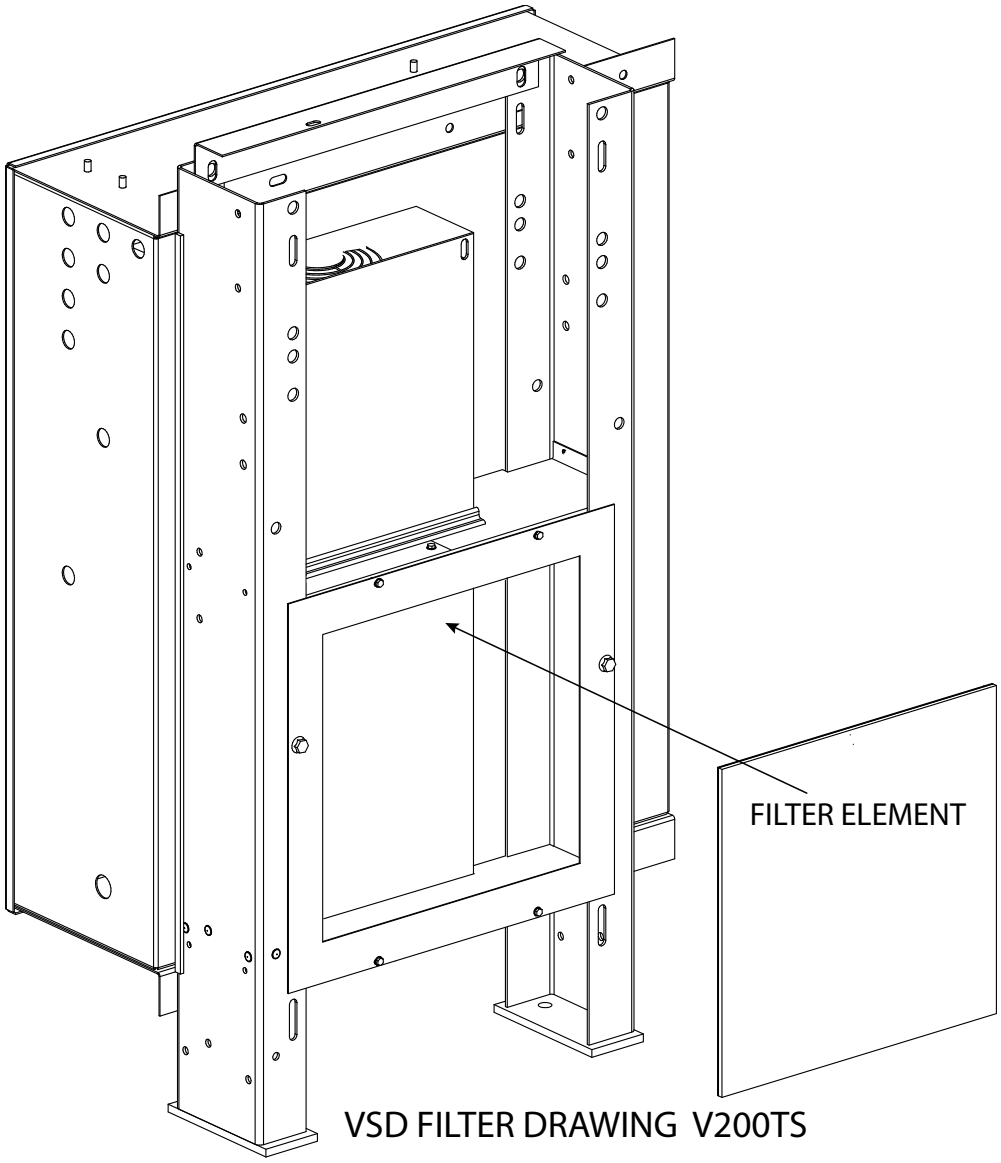

Figure 6-2: V200TS

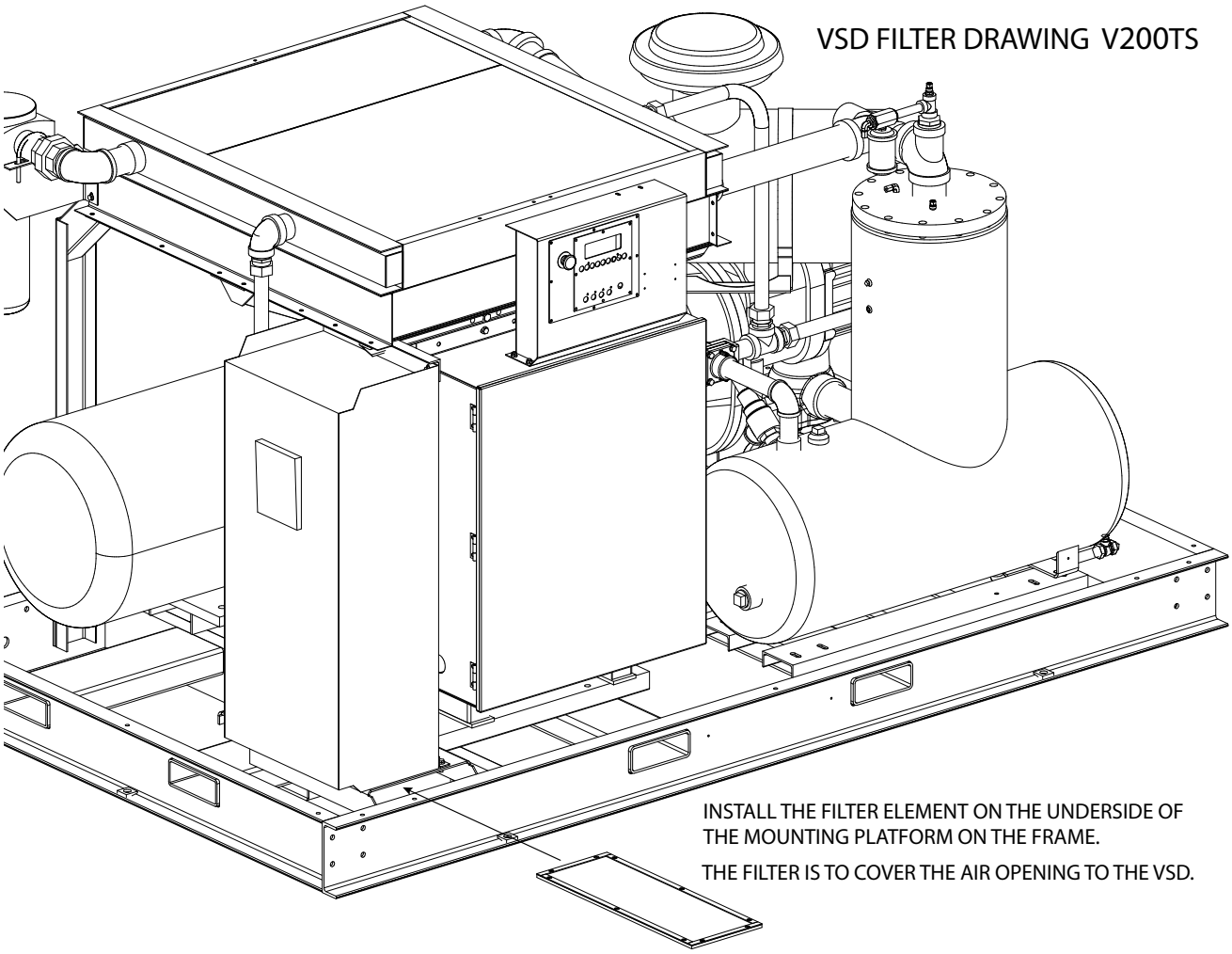

Figure 6-3: V200TS

SULLAIR®

Always air. Always there.

WWW.SULLAIR.COM

SULLAIR CORPORATION

3700 East Michigan Boulevard • Michigan City, Indiana, 46360 U.S.A.
Telephone: 1-219-879-5451

Printed in the U.S.A.

Specifications subject to change without prior notice.
E12EP