Production

SUBJECT TO EAR, ECCN EAR99 AND
RELATED EXPORT CONTROL RESTRICTIONS

REVISIONS						
SHEET	ZONE	REV	ECO NO	DESCRIPTION	DATE	REV BY
-	-	00	606154	PRODUCTION RELEASE	2023-12-27	CYN/RDH
-	D7 C7 D5	01	609213	ADDED AIRLINX ANTENNA "CP-ANT24" AND CALLOUT. ADDED DIMENSIONS 9.86 [250.5] AND 39.12 [993.8].	2025-01-08	CYN/KS

NOTES:

1. ALLOW 4.00 FEET [1.25 METERS] MINIMUM CLEARANCE AROUND MACHINE FOR ACCESS AND FREE CIRCULATION OF AIR.
2. A FOUNDATION OR MOUNTING CAPABLE OF SUPPORTING THE WEIGHT OF PACKAGE, AND RIGID ENOUGH TO MAINTAIN THE COMPRESSOR FRAME LEVEL IS REQUIRED. THE COMPRESSOR FRAME MUST BE LEVELLED AND SECURED BETWEEN THE FRAME AND THE FOUNDATION. NO PIPING LOADS ARE PERMITTED AT EXTERNAL CONNECTIONS.
3. ALL DIMENSIONS ARE ± .50" [12.7MM].
4. RECOMMENDED INCOMING CUSTOMER POWER SUPPLY IS SHOWN ON DRAWING.
5. ALL DIMENSIONS SHOWN IN INCHES WITH MILLIMETER DIMENSIONS IN PARENTHESES.

A1: SPACE REQUIRED TO OPEN DOORS
A2: CONTROLLER
A3: E-STOP
A4: USB
A5: AIR INLET
A6: EXHAUST AIR OUT
A7: INCOMING CUSTOMER POWER SUPPLY Ø2.31 [Ø58.7]
A8: MOISTURE DRAIN CONNECTION 1/2" NPT
A9: AIR OUT CONNECTION 3" NPT
A10: WATER IN 1-1/2" NPT
A11: WATER OUT 1-1/2" NPT

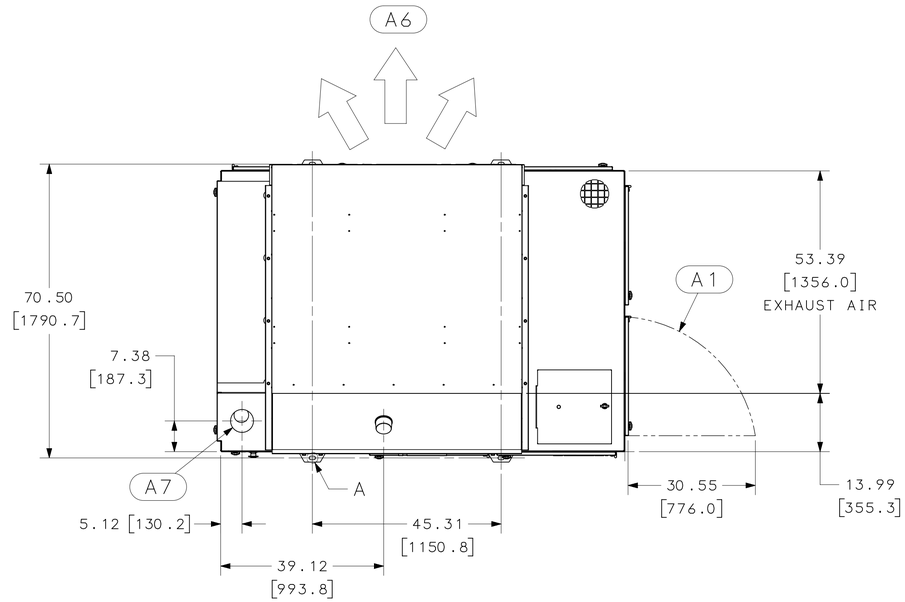

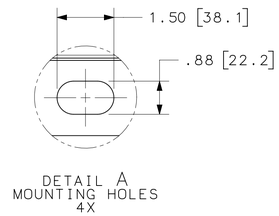

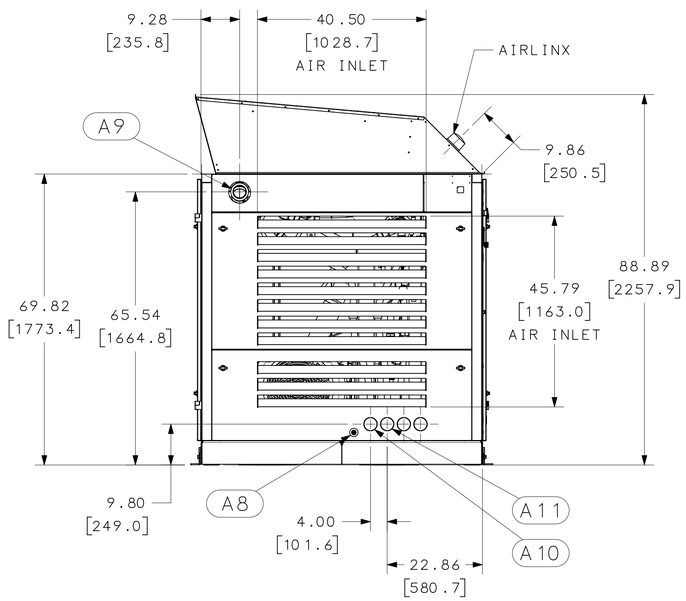

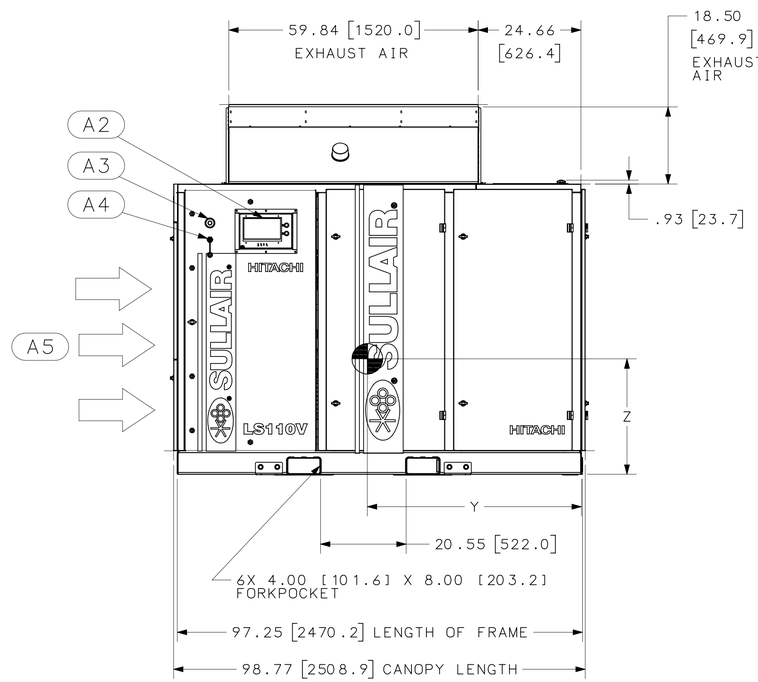

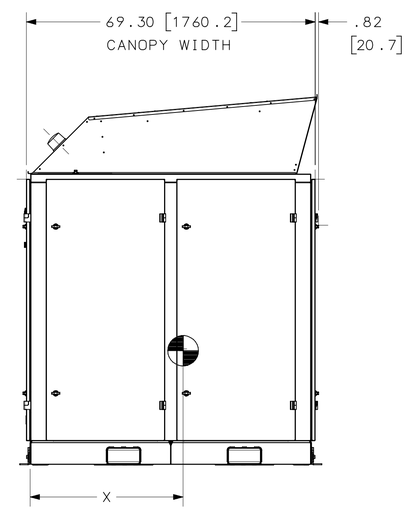

MACHINE CHART				CENTER OF GRAVITY (COG)		
MODEL	MAIN MOTOR HP	WEIGHT	CFM COOLING AIR	X±2.0	Y±1.5	Z±0.5
LS90	125	5926 LB [2694 KG]	2845 CFM [4834 M3/HR]	37.8	50.4	27.7
LS90S	125	6050 LB [2750 KG]	2845 CFM [4834 M3/HR]	38.1	49.9	27.3
LS90V	125	6004 LB [2729 KG]	2845 CFM [4834 M3/HR]	36.7	51.4	27.7
LS110	150	6103 LB [2774 KG]	2845 CFM [4834 M3/HR]	38.2	51.6	27.3
LS110S	150	6257 LB [2844 KG]	2845 CFM [4834 M3/HR]	38.5	51.1	26.9
LS110V	150	6180 LB [2809 KG]	2845 CFM [4834 M3/HR]	36.6	52.5	27.5

SULLAIR
A Hitachi Group Company

DESIGNED	R.HUTSON	MATERIAL	
DRAWN	CYIENT	FINISH SPEC	
ENGINEER	K.SHARMA	WEIGHT	
STANDARDS	-	PROD CODE	
SUPERVISOR	-	SHEET	1 OF 1
MANAGER	-		
DATE	2023-12-27		

ID,
LS90/LS110 WC ENCL W/HOOD

DWG NO 1004-5362 REV 01

THIS DOCUMENT IS THE PROPERTY OF SULLAIR. YOU MAY NOT POSSESS, USE, COPY OR DISCLOSE THIS DOCUMENT OR ANY INFORMATION CONTAINED IN IT FOR ANY PURPOSE WITHOUT LIMITATION TO DESIGN, MANUFACTURE OR REPAIR PARTS, OR OBTAIN ANY GOVERNMENT APPROVAL TO DO SO, WITHOUT SULLAIR'S EXPRESSED WRITTEN PERMISSION. ANY INFORMATION YOU OBTAIN FROM THIS DOCUMENT FROM ANY SOURCE CONSTITUTES SUCH PERMISSION. POSSESSION, USE, COPYING OR DISCLOSURE BY ANYONE WITHOUT SULLAIR'S EXPRESSED WRITTEN PERMISSION IS NOT AUTHORIZED AND MAY RESULT IN CRIMINAL AND/OR CIVIL LIABILITY.

THIRD ANGLE PROJECTION

SIZE D