SUBJECT TO EAR, ECCN EAR99 AND
RELATED EXPORT CONTROL RESTRICTIONS

REVISIONS						
SHEET	ZONE	REV	ECO NO	DESCRIPTION	DATE	REV BY
-	-	00	507310	PRODUCTION RELEASE	2017-03-30	ECA
-	-	01	507573	ADD COG TO DRAWING	2017-07-24	BC/ECA
-	F4; E3	02	509753	ADDED COOLER EXHAUST LOCATION DIMS 26.01 & 14.93; UPDATED DRAWING FORMAT	2018-05-18	HCL/APS

NOTES:

1. ALLOW 4.00 FEET [1.25 METERS] MINIMUM CLEARANCE AROUND MACHINE FOR ACCESS AND FREE CIRCULATION OF AIR.
2. A FOUNDATION OR MOUNTING CAPABLE OF SUPPORTING THE WEIGHT OF PACKAGE, AND RIGID ENOUGH TO MAINTAIN THE COMPRESSOR FRAME LEVEL IS REQUIRED. THE COMPRESSOR FRAME MUST BE LEVELLED AND SECURED BETWEEN THE FRAME AND THE FOUNDATION. NO PIPING LOADS ARE PERMITTED AT EXTERNAL CONNECTIONS.
3. ALL DIMENSIONS ARE ± .50" [12.7MM].
4. RECOMMENDED INCOMING CUSTOMER POWER SUPPLY IS SHOWN ON DRAWING.
5. ALL DIMENSIONS SHOWN IN INCHES WITH MILLIMETER DIMENSIONS IN PARENTHESES.

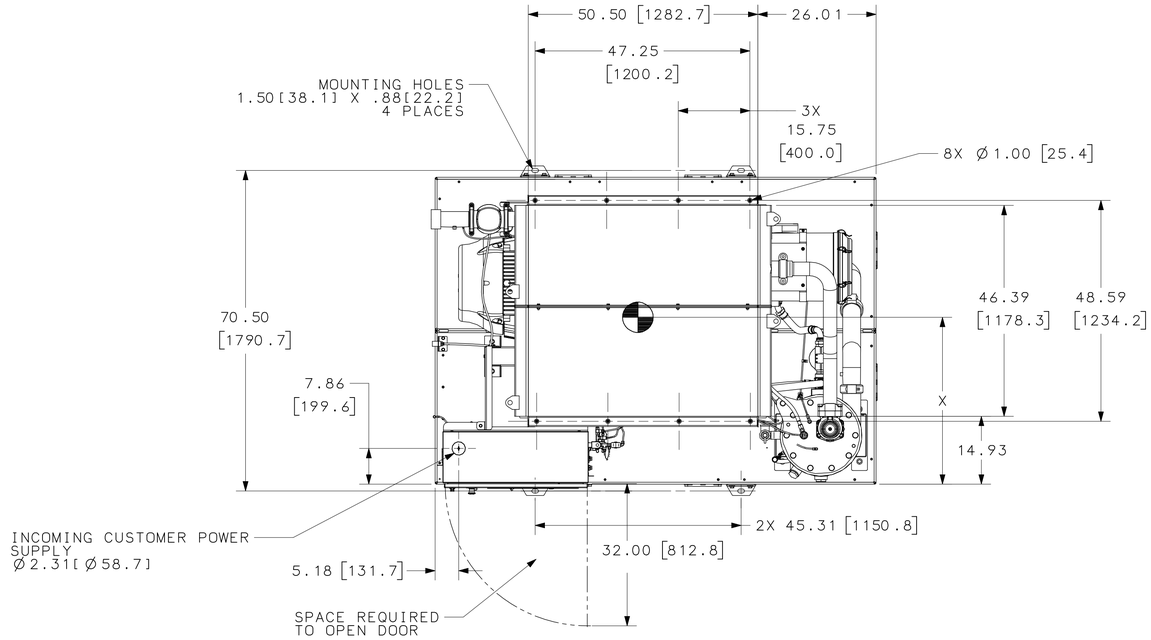

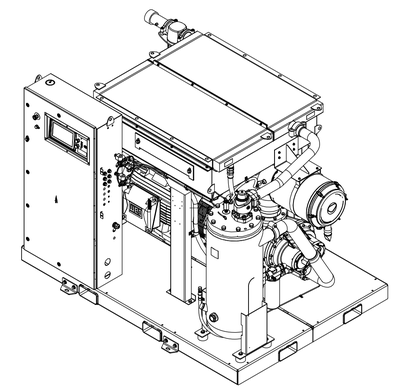

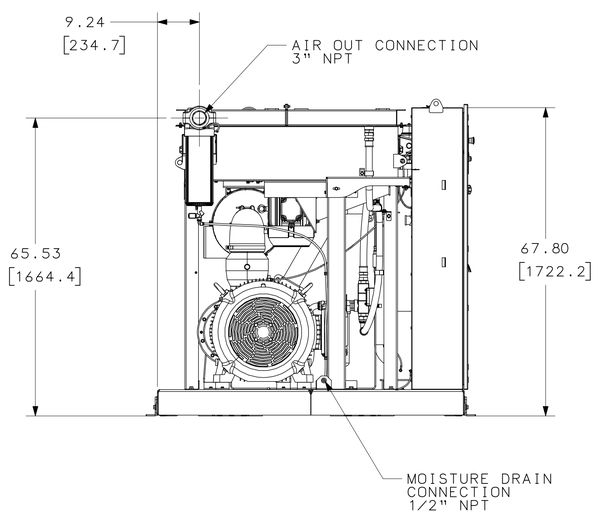

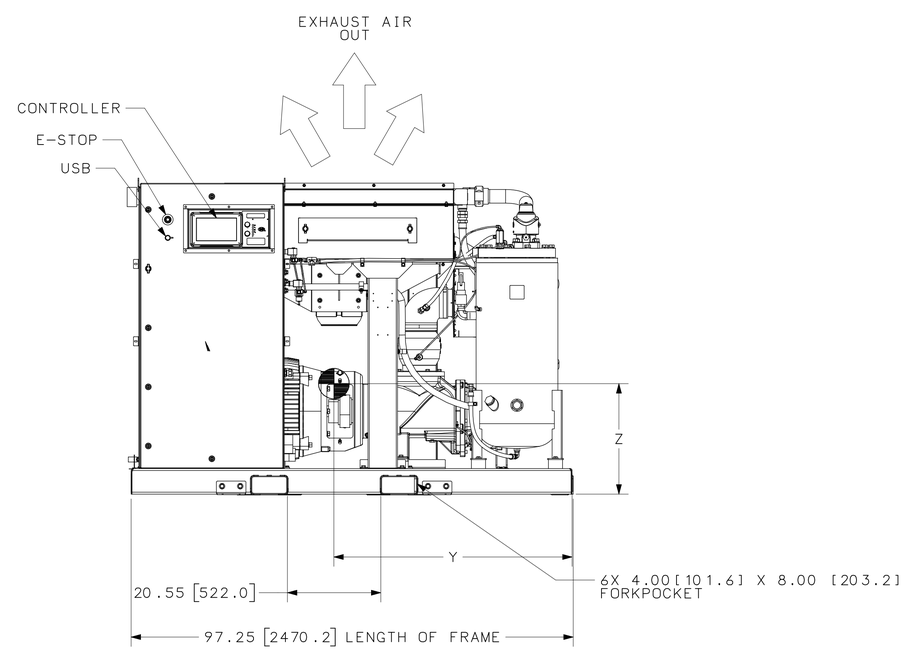

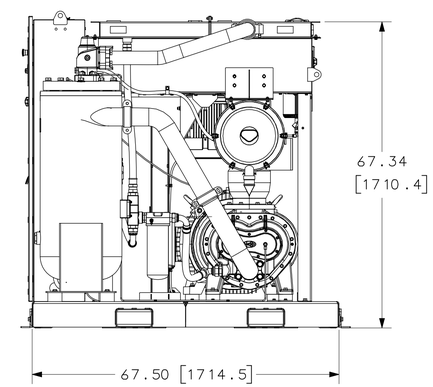

MACHINE CHART				CENTER OF GRAVITY (COG)		
MODEL	MAIN MOTOR HP	WEIGHT	CFM COOLING AIR	X±2.0	Y±1.5	Z±0.5
LS90	125	5262 lb [2387 kg]	11,800 cfm [20,048 m3/hr]	38.0	51.2	24.2
LS90S	125	5386 lb [2443 kg]	11,800 cfm [20,048 m3/hr]	38.3	50.6	23.9
LS90V	125	5340 lb [2422 kg]	11,800 cfm [20,048 m3/hr]	36.7	52.4	24.3
LS110	150	5439 lb [2467 kg]	11,800 cfm [20,048 m3/hr]	38.5	52.5	23.9
LS110S	150	5593 lb [2537 kg]	11,800 cfm [20,048 m3/hr]	38.8	51.9	23.6
LS110V	150	5516 lb [2502 kg]	11,800 cfm [20,048 m3/hr]	36.6	53.5	24.2

TOLERANCES UNLESS OTHERWISE SPECIFIED	SULLAIR A Hitachi Group Company	MATERIAL		ID, LS90/LS110 AC OPEN	
	DESIGNED ECA	FINISH SPEC			
ALL DIMENSIONS ARE IN INCHES	DRAWN ECA	WEIGHT	LBS		
ONE DECIMAL PLACE ±.1	ENGINEER -	PROD CODE	X01B	DWG NO 02250232-520	REV 02
TWO DECIMAL PLACES ±.06	STANDARDS -	SHEET	1 OF 1		
THREE DECIMAL PLACES ±.015	SUPERVISOR -				
ANGULAR DIMENSION ±1.0°	MANAGER -				
HOLE DIAMETER ±.03	DATE 2017-06-05			THIRD ANGLE PROJECTION	SIZE D

THIS DOCUMENT IS THE PROPERTY OF SULLAIR. YOU MAY NOT POSSESS, USE, COPY OR DISCLOSE THIS DOCUMENT OR ANY INFORMATION IN IT FOR ANY PURPOSE, INCLUDING WITHOUT LIMITATION, TO DESIGN, MANUFACTURE, REPAIR PARTS, OR OBTAIN ANY GOVERNMENT APPROVAL, UNLESS SUCH USE IS AUTHORIZED BY SULLAIR. YOU MAY NOT PERMEATION, NEITHER REGETIF NOR POSSESSION OF THIS DOCUMENT, FLOW FROM ANY SOURCE, CONSTITUTES SUCH PERMISSION. POSSESSION, USE, COPYING OR DISCLOSURE WITHOUT SULLAIR'S PERMISSION, EXPRESSED OR IMPLIED, OR ANY PERMISSION IS NOT AUTHORIZED AND MAY RESULT IN CRIMINAL AND/OR CIVIL LIABILITY.